JA84-001

Audio Junction Panel

Installation Manual

Rev A

Jupiter Avionics Corporation
1959 Kirschner Road
Kelowna BC
Canada V1Y 4N7
Tel: +1 778 478 2232
Toll-Free: 1 855 478 2232
www.jupiteravionics.com

Copyright 2021 Jupiter Avionics Corp.

All rights reserved

Jupiter Avionics Corporation (JAC) permits a single copy of this manual to be printed or downloaded for the express use of an installing agency. Any such electronic or printed copy of this manual must contain the complete text of this copyright notice. Any unauthorized commercial distribution of this manual is strictly prohibited. Except as described above, no part of this manual may be reproduced, copied, transmitted, disseminated, downloaded, or stored in any storage medium for any purpose without the express prior written consent of JAC.

IMPORTANT:

Information in this document is subject to change without notice.

To confirm the current revision status of this manual, visit the JAC website:

www.jupiteravionics.com

RECORD OF REVISIONS			
Revision	**Rev Date**	**Description**	**ECR**
A	Mar 2021	Initial release, Serial number 1001 and higher.	5834

Prepared:	Checked:	Approved:
DGB	JAC 04-02-24 AH	JAC 05-30-24 KDV

Table of Contents

SECTION 1 - DESCRIPTION 1
1.1 System Overview 1
1.2 Features Overview 1
1.3 Inputs and Outputs 1
1.3.1 Inputs 1
1.3.2 Outputs 1
1.3.3 Bi-directional Ports 2
1.3.4 Grounds 2
1.3.5 Shields 2
1.3.6 Jumpers 2
1.3.7 Spares 2
1.4 Specifications 3
1.4.1 Electrical Specifications 3
1.4.2 Mechanical Specifications 4
1.4.3 Environmental Specifications 4
1.4.4 Flammability of Materials 4
SECTION 2 – INSTALLATION 5
2.1 Introduction 5
2.2 Continued Airworthiness 5
2.3 Unpacking and Inspecting Equipment 5
2.3.1 Warranty 5
2.4 Installation Procedures 5
2.4.1 Installation Limitations 5
2.4.2 Cabling and Wiring 5
2.4.3 Mechanical Installation 6
2.4.4 Post Installation Checks 6
2.5 System Operation 6
2.5.1 Alert Operation 6
2.5.2 Direct Audio Operation 6
2.5.3 Com MIC Operation 6
2.5.4 COM PTT Operation 6
2.5.5 Com Receive Operation 6
2.5.6 ICS Operation 7
2.5.7 Music Operation 7
2.5.8 NAV Receive Operation 7
2.6 Installation Kit 7
2.6.1 Recommended Crimp Tools 7
2.7 Installation Drawings 7
Appendix A - Installation Drawings A1
A1 Introduction A1
A2 Installation Drawings A1
Appendix B - Certification Documents B1
B1 Airworthiness Approval B2
B2 Instructions for Continued Airworthiness B2

SECTION 1 - DESCRIPTION

1.1 System Overview

The JA84-001 Audio Junction Panel is a centralized management system that distributes transceiver, receiver, ICS, music and warning source audio in an aircraft for up to five audio control panels.

1.2 Features Overview

To ensure reliability, the JA84-001 utilizes a single circuit board design to minimize solder connections.

The JA84-001 supports up to five audio control panels

The JA84-001 supports up to ten transceivers.

The JA84-001 supports up to six receivers.

The JA84-001 supports up to four direct audio inputs.

The JA84-001 supports up to four music inputs.

The JA84-001 supports four ICS Tie Lines in parallel or individual to a ICS Selector panel.

The JA84-001 supports up to four discrete Alert inputs.

1.3 Inputs and Outputs

Refer to the JA84-001 connector maps for the mating connector designators and pin assignments for the input and output signals.

1.3.1 Inputs

Name	Qty	Type
COM MIC HI/LO	50	Audio inputs (10 per audio panel TX connector)
COM PTT	50	Audio inputs (10 per audio panel TX connector)
COM RX HI/LO	10	Audio inputs (2 per audio panel TX connector pair)
NAV RX HI/LO	6	Audio inputs (2 per NAV RX connector pair)
DIRECT AUDIO HI/LO	4	Audio inputs (2 per direct audio pair)
MUSIC LEFT/RIGHT HI/LO	4	Audio inputs
ALERT	4	Discrete inputs (on alert connector)

1.3.2 Outputs

Name	Qty	Type
COM RX HI/LO	50	Audio outputs (10 per Audio panel RX Connector pair)
DIRECT AUDIO 1 thru 4 HI/LO	20	Audio inputs (4 per Audio panel RX Connector)
NAV RX HI/LO	30	Audio inputs (6 per Audio panel RX Connector)
MUSIC LEFT/RIGHT HI/LO	20	Audio outputs (4 per Audio panel TX Connector)
ALERT	20	Discrete outputs (4 per Audio panel RX Connector)
COM PTT	10	Audio signal (2 per Audio panel TX Connector pair)
COM MIC HI/LO	10	Audio signal (2 per Audio panel TX Connector pair)

1.3.3 Bi-directional Ports

Name	Qty	Type
ICS TIE HI/LO	5	Bi-directional Audio signal (1 per Audio panel TX Connector

1.3.4 Grounds

Name	Qty	Type
CHASSIS GROUND	1	Chassis ground
COM AUDIO GROUND	5	COM audio ground (1 per TX Connector pair)
NAV AUDIO GROUND	3	NAV audio ground (1 per NAV receiver pair)
DIRECT AUDIO GROUND	2	NAV audio ground (1 per Direct audio connector pair)
ALERT GROUND	4	Alert ground (on Alert connector)

1.3.5 Shields

Name	Qty	Type
COM RX SHIELD	10	COM RX shield (2 per TX Connector pair)
NAV RX SHIELD	6	NAV RX shield (2 per NAV receiver pair)
DIRECT AUDIO SHIELD	2	Direct audio shield (1 per Direct audio connector pair)

1.3.6 Jumpers

Name	Qty	Type
COM RX LO JUMPERS	10	COM RX jumpers (2 per TX Connector pair)
NAV RX LO JUMPERS	6	NAV RX jumpers (2 per NAV receiver pair)
DIRECT AUDIO LO JUMPERS	2	Direct audio jumpers (2 per direct audio connector pair)

1.3.7 Spares

Name	Qty	Type
SPARE	5	Spare (1 per Audio panel TX Connector)
SPARE	10	Spare (2 per Audio panel RX Connector)
SPARE	1	Spare (for Music 1 & 2 connectors)
SPARE	1	Spare (for Alert connector)

1.4 Specifications

1.4.1 Electrical Specifications

Power Input N/A

1.4.1.1 Audio Performance

Rated Input Level

Receive audio rated input level	7.75 Vrms Max.
Direct audio rated input level	7.75 Vrms Max.
Music rated input level	400 mVrms Max.
Com Microphone input level	250 mVrms Max.
Intercom Tie Line input level	1.20 Vrms Max.

Rated Output Level

Receive Audio output	7.75 Vrms Max.
Com Microphone rated output	250 mVrms Max.
Intercom Tie Line rated output	1.2 Vrms Max.
Direct audio rated output level	7.75 Vrms Max.
Music rated output level	400 mVrms Max.

Audio Frequency Response

Audio output audio frequency response	≤3dB from 300 to 6000 Hz

Distortion Characteristics

Audio output distortion at rated power	≤10%

Output Load

Receive audio load	600 Ω Max.
Com Microphone load	150 Ω Max.
Intercom Tie Line rated load	285 Ω max (7 loads)
Direct audio load	600 Ω Max.
Music audio load	600 Ω Max.

Input to output Crosstalk and Bleed-through Level

Input to Output crosstalk	≤55 dB

Input to Input Crosstalk Level

Input to Input crosstalk	≤60 dB

Input to Microphone Output Crosstalk Level

Input to Microphone Output crosstalk	≤1.0 mVrms

Audio Noise Level without Signal

Noise level below the rated output	≥60 dB

1.4.2 Mechanical Specifications

Height		1.52 in [38.6 mm] max
Depth		6.13 in [155.7 mm] max
Width		9.57 in [243.1 mm]max
Weight		1.64 lb [0.74 kg] max
Material		brushed aluminum with conversion coating
Connectors (22):	J1 to J5	Five 50-pin D-Sub female
	J6 to J10	Five 37-pin D-Sub male
	J11 to J15	Five 15-pin D-Sub female
	J16 to J18	Three 9-pin D-Sub male
	J19 to J20	Two 9-pin D-Sub male
	J21	One 9-pin D-Sub male
	J22	One 9-pin D-Sub male
Mounting		Four 10-32 fasteners
Bonding		≤ 2.5 mΩ
Installation kit part number		INST-JA84A, INST-JA84C, INST-JA84-N

1.4.3 Environmental Specifications

The JA84-001 Audio Junction Panel has been qualified to the environmental conditions listed below.

Temperature:	
Operating	-45 °C to +70 °C
Ground Survival	-55 °C to +85 °C
Altitude	50,000 ft
Humidity	Cat A (48 hours)
Shock, Crash Safety	6 g, 20 g for 11 ms

1.4.4 Flammability of Materials

The JA84-001 complies with the requirements of RTCA/DO-160G Sec 26.3.3 "Flammability", through equivalent flammability testing of materials and the Small Parts Exemption.

SECTION 2 – INSTALLATION

2.1 Introduction

This section contains unpacking and inspection procedures, installation information, and post-installation checks.

2.2 Continued Airworthiness

Maintenance of the JA84-001 is on condition only. Scheduled inspection and/or periodic maintenance of this unit is not required.

2.3 Unpacking and Inspecting Equipment

Unpack the equipment carefully. Check for shipping damage and report any problems to the relevant carrier. Confirm that the Authorized Release Certificate or Certificate of Conformance is included. Complete the on-line warranty card from the Jupiter Avionics Corporation (JAC) website - www.jupiteravionics.com/warranty

2.3.1 Warranty

This product manufactured by JAC is warranted to be free of defects in workmanship or performance for 2 years from the date of installation by an approved JAC dealer or agency. This warranty covers the cost of all materials and labour to repair or replace the unit, but does not include the cost of transporting the defective unit to and from JAC or its designated warranty repair centre, or of removing and replacing the defective unit in the aircraft. This warranty does not cover failures due to abuse, misuse, accident, or unauthorized alteration or repairs.

THIS WARRANTY IS VOID IF THE PRODUCT IS NOT INSTALLED BY AN AUTHORIZED JAC DEALER. If the on-line warranty card is not completed, the product will be warranted from the date of manufacture.

Contact JAC for return authorization, and for any questions regarding this warranty and how it applies to your unit(s). JAC is the final arbiter concerning warranty issues.

2.4 Installation Procedures

WARNING: Loud noise can cause hearing damage. Set the headset volume to minimum before conducting tests, and slowly increase the volume to a comfortable listening level.

CAUTION: The power input circuitry of the unit may be damaged if the installation does not conform to the wiring instructions in this manual.

2.4.1 Installation Limitations

Those installing the JA84-001, on or in a specific type or class of aircraft, must determine that the aircraft installation conditions meet standards. The JA84-001 may be installed only by following the applicable airworthiness requirements.

2.4.2 Cabling and Wiring

All wire shall be selected in accordance with the original aircraft manufacturer's maintenance instructions, or AC43.13-1B Change 1, Paragraphs 11-76 through 11-78. Unshielded wire types shall qualify to MIL-W-22759 as specified in AC43.13-1B Change 1, Paragraphs 11-85, 11-86, and listed in Table 11-11. For shielded wire applications, use Tefzel

MIL-C-27500 shielded wire with tag ring or equivalent (for shield terminations) to make the most compact and easily terminated interconnect. Follow the Connector Map in Appendix A of this manual.

Allow 3” from the end of the shielded wiring to the shield termination to allow the connector hood to be easily installed. Refer to the Interconnect drawing in Appendix A of this manual for shield termination details. Note that this unit has a ‘clamshell’ hood that is installed after the wiring is complete.

Maintain wire segregation and route wiring in accordance with the original aircraft manufacturer’s maintenance instructions.

Unless otherwise noted, all wiring shall be a minimum of 24 AWG, except power and ground lines, which shall be a minimum of 22 AWG. Refer to the Interconnect drawing for additional specifications. Check that the ground connection is clean and well secured, and that it shares no path with any electrically noisy aircraft accessories such as blowers, turn-and-bank instruments, or similar loads.

2.4.3 Mechanical Installation

The JA84-001 can be mounted in any attitude and location with sufficient clearance for the connector and wiring harness. It requires no direct cooling.

2.4.4 Post Installation Checks

2.4.4.1 Voltage/Resistance checks.

Do not attach this unit until the following conditions are met:

a) Check P11 to P15 pin **12** for continuity to ground (less than 0.5 Ω).
b) Check P16 to P20 pin **3** for continuity to ground (less than 0.5 Ω).
c) Check P22 pins **6** to **9** for continuity to ground (less than 0.5 Ω).
d) Check all pins for shorts to ground or adjacent pins.

2.4.4.2 Power on Checks.

Power up the aircraft’s systems and confirm normal operation of all functions of the JA84-001.

When all performance checks are satisfied, complete the necessary regulatory documentation before releasing the aircraft for service. Refer to Appendix B.

2.5 System Operation

2.5.1 Alert Operation

The Alert discretes are routed from the Alert connector to the Audio Panel Transceiver Connectors output.

2.5.2 Direct Audio Operation

The Direct Audio is routed from the DIRECT AUDIO connectors to the Audio Panel Receive Connectors output.

2.5.3 Com MIC Operation

The Com MICs are routed from the Audio Panel Transceiver connectors to the Transceiver Connectors.

2.5.4 COM PTT Operation

The Com PTT is routed from the Audio Panel Transceiver connectors to the Transceiver Connectors.

2.5.5 Com Receive Operation

The Com Receive Audio is routed from the Transceiver connectors to the Audio Panel Receive Connectors output.

2.5.6 ICS Operation

The ICS Tie Line Audio is routed between the Audio Panel Transceiver connectors.

2.5.7 Music Operation

The Music Audio is routed from the Music connector to the Audio Panel Receive Connectors output.

2.5.8 NAV Receive Operation

The NAV Receive Audio is routed from the NAV Receive connectors to the Audio Panel Receive Connectors output.

2.6 Installation Kit

The kits required to install this unit are not included with the unit. Kits for each attached device are sold separately.

The installation kit (Part # INST-JA84A - One Audio Controller) consists of the following:

Quantity	Description	JAC Part #
1	37 socket D-Sub connector	CON-3460-0137
1	50 socket D-Sub connector	CON-3460-0150
2	TAG ring	CON-5500-0625
2	Jack screws	CON-5150-0440
1	37 pin clamshell hood	CON-5300-0137
1	50 pin clamshell hood	CON-5300-0150
87	Machined crimp socket, 20 to 24 AWG wire size range	CON-3320-2024M
2	Heat Shrink Tubing	WIR-HTSK-1000

The installation kit (Part # INST-JA84C - Two Com Radios) consists of the following:

Quantity	Description	JAC Part #
1	15 socket D-Sub connector	CON-3460-0115
1	TAG ring	CON-5500-0375
1	Jack screws	CON-5150-0440
1	15 pin clamshell hood	CON-5300-0137
15	Machined crimp socket, 20 to 24 AWG wire size range	CON-3320-2024M
1	Heat Shrink Tubing	WIR-HTSK-0750

The installation kit (Part # INST-JA84N - Two Nav Radios) consists of the following:

Quantity	Description	JAC Part #
1	9 socket D-Sub connector	CON-3460-0009
1	TAG ring	CON-5500-0375
1	9 pin clamshell hood	CON-5300-0109
9	Machined crimp socket, 20 to 24 AWG wire size range	CON-3320-2024M
1	Heat Shrink Tubing	WIR-HTSK-0750

2.6.1 Recommended Crimp Tools

Standard D-Sub Crimp Tool Chart			
Tool Type	**Hand crimping tool**	**Positioner**	**Insertion/extractor tool**
POSITRONIC	9507-0-0-0	9502-5-0-0	4711-2-0-0
DANIELS	AFM 8	K13-1	91067-2
MIL-SPEC	M22520/2-01	M22520/2-08	M81969/1-02

2.7 Installation Drawings

The drawings and documents required for Installation can be found in Appendix A of this manual.

Installation Manual

Appendix A - Installation Drawings

A1 Introduction

The drawings necessary for installation and troubleshooting of the JA84-001 Audio Junction Panel are in this Appendix, as listed below.

A2 Installation Drawings

DOCUMENT	Rev
JA84-001-001 Connector Map	A
JA84-001-001 Interconnect	A
JA84-001-001 Mechanical Installation	A

Audio Panel 1 Receiver Outputs

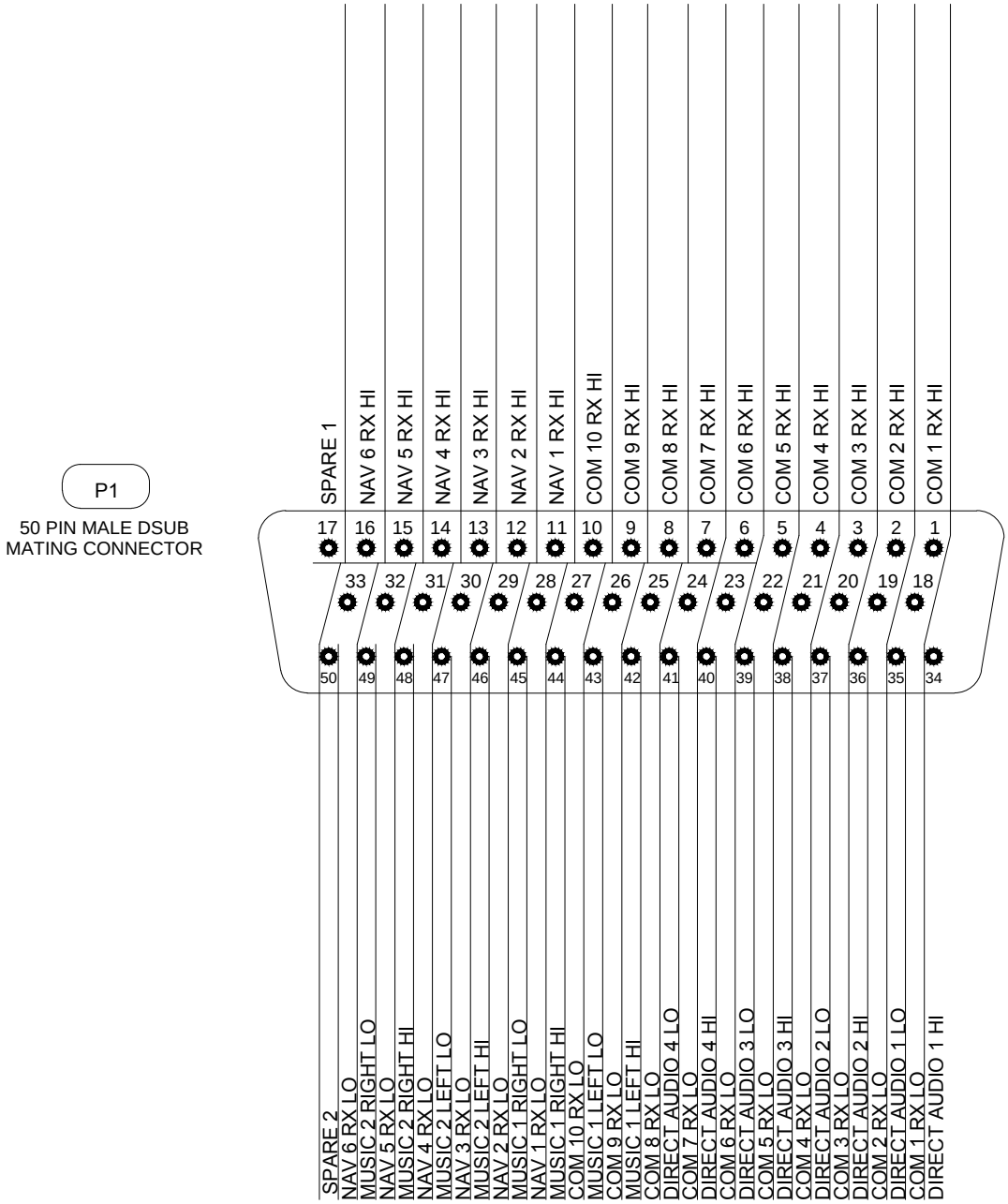

VIEW IS FROM REAR OF MATING CONNECTOR

PREPARED	KV	JUPITER AVIONICS CORPORATION		
CHECKED		TITLE Audio Junction Panel P1 Connector Map		
APPROVED		NCAGE CODE L00N3	PART NO. JA84-001	SHEET 01/22
CONFIDENTIAL & PROPRIETARY TO JUPITER AVIONICS CORP.		DOC NO. JA84-001 Connector Map Rev A		

Audio Panel 2 Receiver Outputs

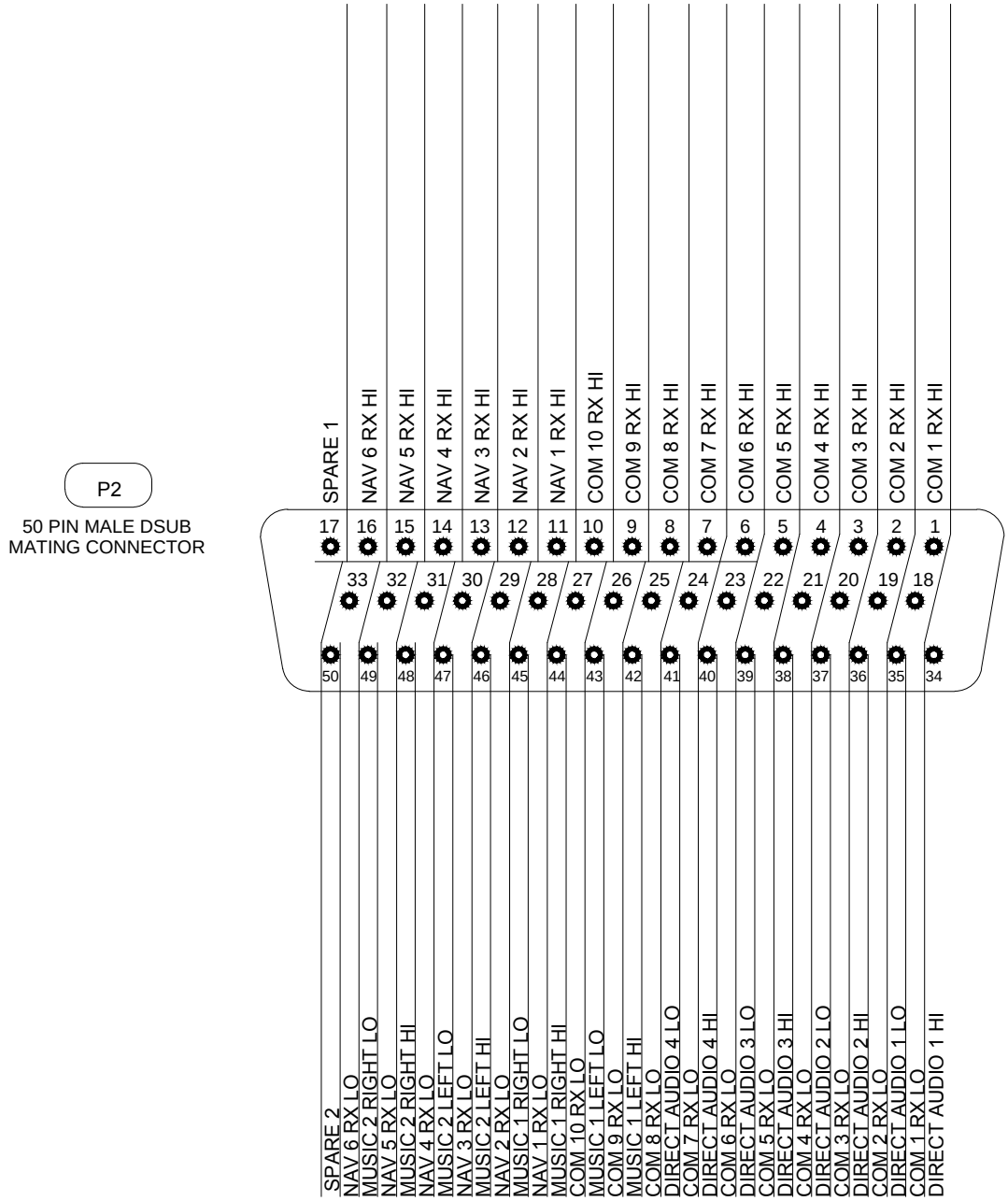

VIEW IS FROM REAR OF MATING CONNECTOR

PREPARED	KV	JUPITER AVIONICS CORPORATION		
CHECKED		TITLE Audio Junction Panel P2 Connector Map		
APPROVED		NCAGE CODE L00N3	PART NO. JA84-001	SHEET 02/22
CONFIDENTIAL & PROPRIETARY TO JUPITER AVIONICS CORP.		DOC NO. JA84-001 Connector Map Rev A		

Audio Panel 3 Receiver Outputs

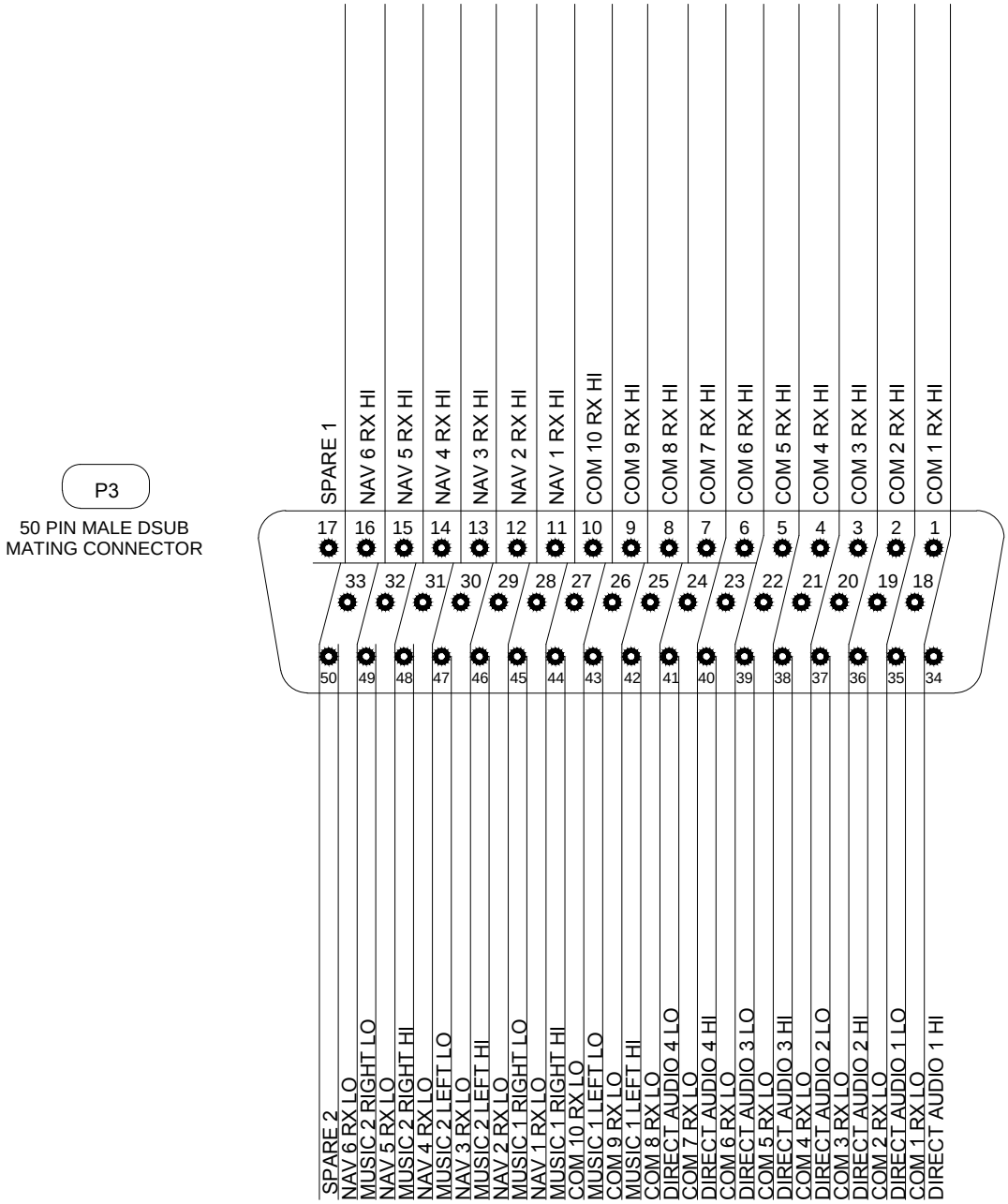

VIEW IS FROM REAR OF MATING CONNECTOR

PREPARED	KV	JUPITER AVIONICS CORPORATION		
CHECKED		TITLE Audio Junction Panel P3 Connector Map		
APPROVED		NCAGE CODE L00N3	PART NO. JA84-001	SHEET 03/22
CONFIDENTIAL & PROPRIETARY TO JUPITER AVIONICS CORP.		DOC NO. JA84-001 Connector Map Rev A		

Audio Panel 4 Receiver Outputs

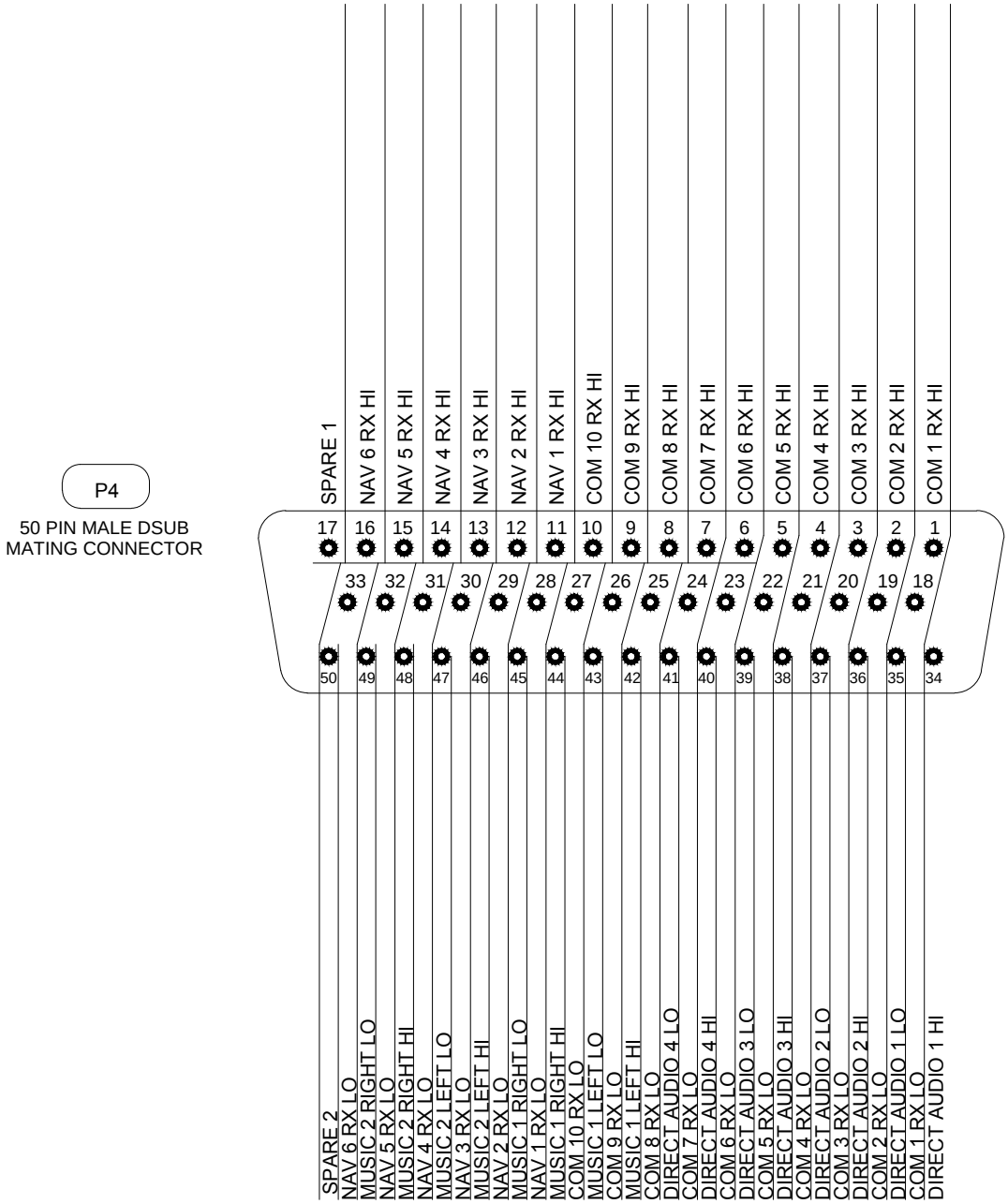

VIEW IS FROM REAR OF MATING CONNECTOR

PREPARED	KV	JUPITER AVIONICS CORPORATION		
CHECKED		TITLE Audio Junction Panel P4 Connector Map		
APPROVED		NCAGE CODE L00N3	PART NO. JA84-001	SHEET 04/22
CONFIDENTIAL & PROPRIETARY TO JUPITER AVIONICS CORP.		DOC NO. JA84-001 Connector Map Rev A		

Audio Panel 5 Receiver Outputs

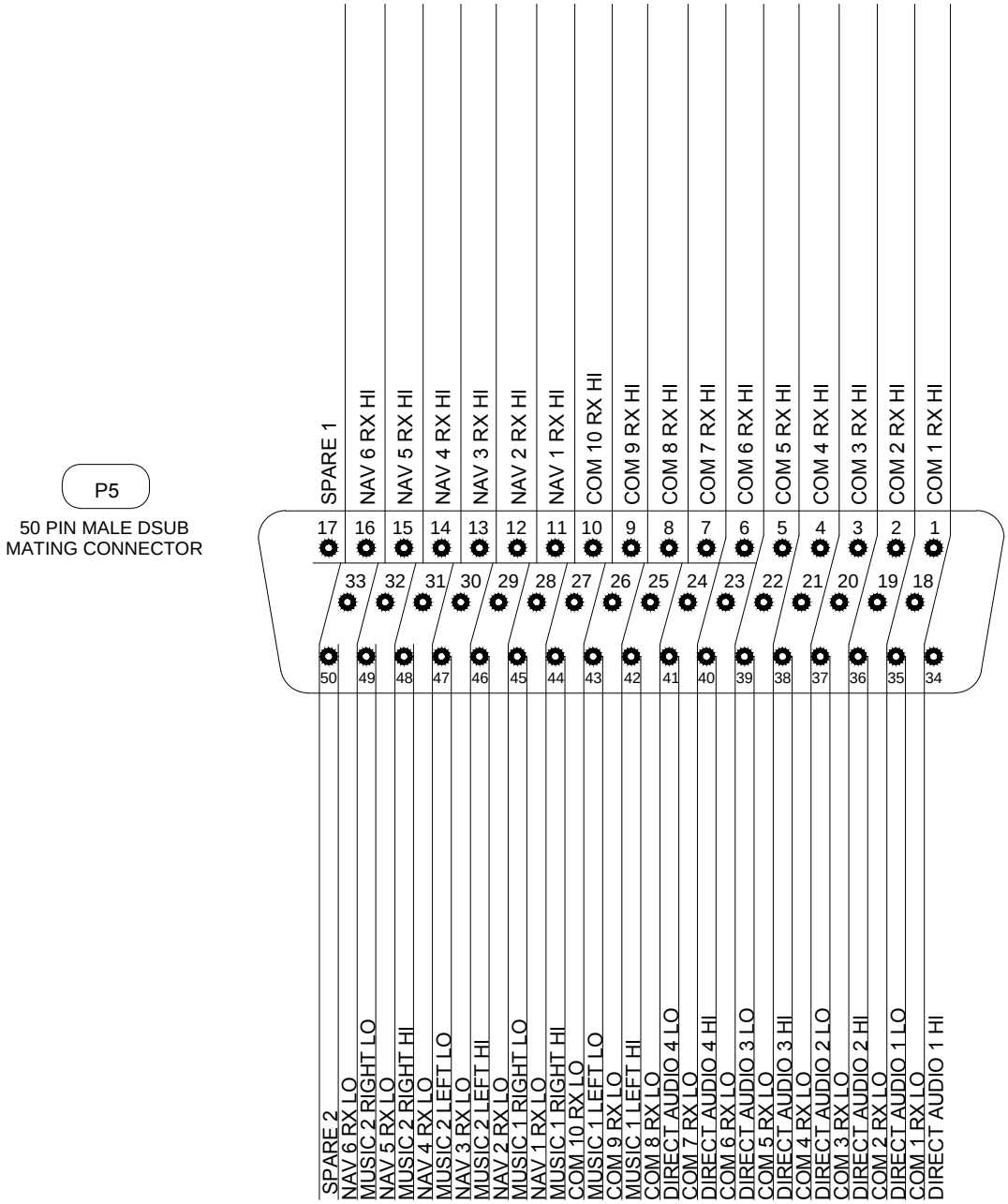

VIEW IS FROM REAR OF MATING CONNECTOR

PREPARED	KV	JUPITER AVIONICS CORPORATION		
CHECKED		TITLE Audio Junction Panel P5 Connector Map		
APPROVED		NCAGE CODE L00N3	PART NO. JA84-001	SHEET 05/22
CONFIDENTIAL & PROPRIETARY TO JUPITER AVIONICS CORP.		DOC NO. JA84-001 Connector Map Rev A		

Audio Panel 1 Transceiver Inputs

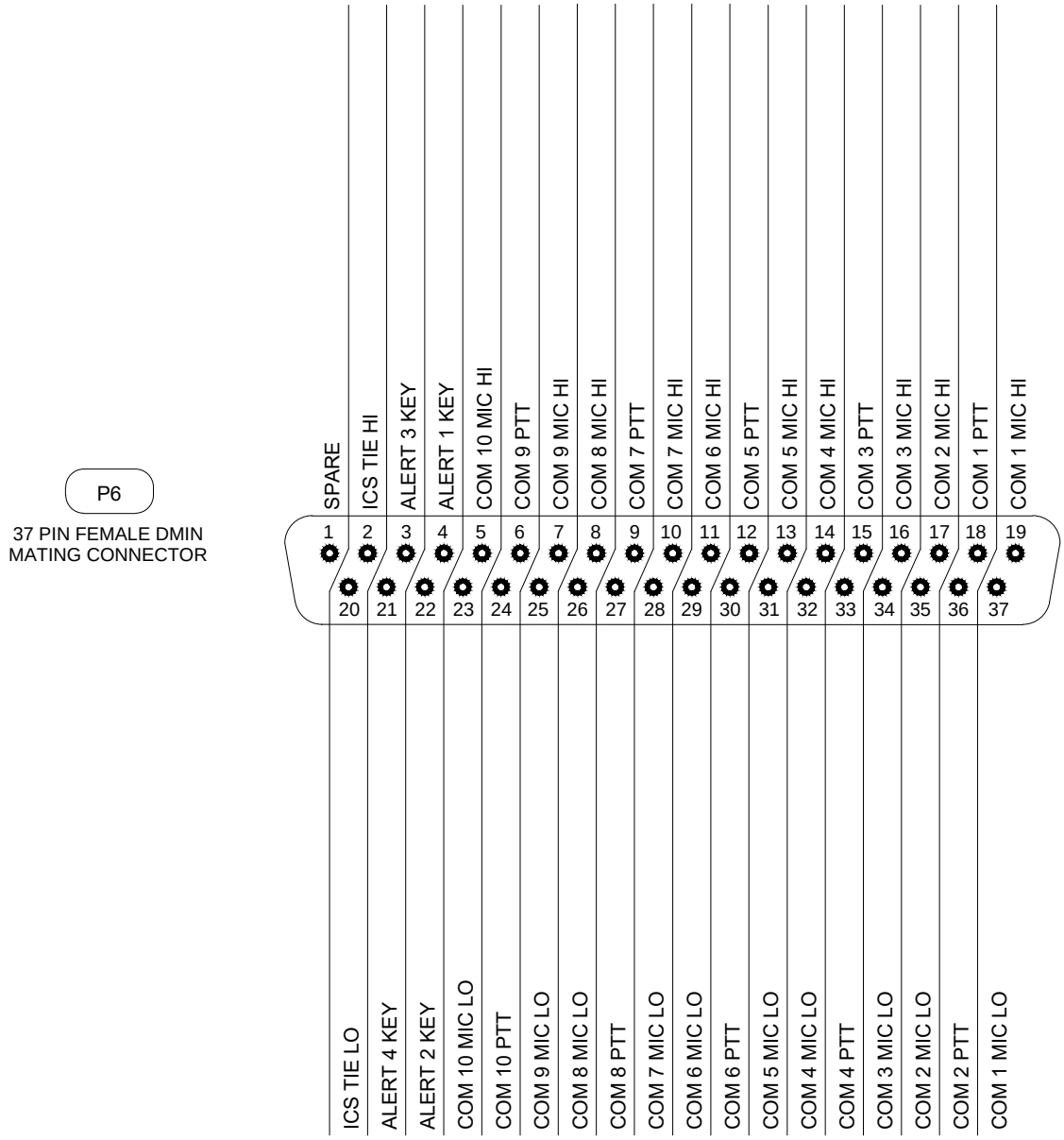

VIEW IS FROM REAR OF MATING CONNECTOR

PREPARED	KV	JUPITER AVIONICS CORPORATION		
CHECKED		TITLE Audio Junction Panel P6 Connector Map		
APPROVED		NCAGE CODE L00N3	PART NO. JA84-001	SHEET 06/22
CONFIDENTIAL & PROPRIETARY TO JUPITER AVIONICS CORP.		DOC NO. JA84-001 Connector Map Rev A		

Audio Panel 2 Transceiver Inputs

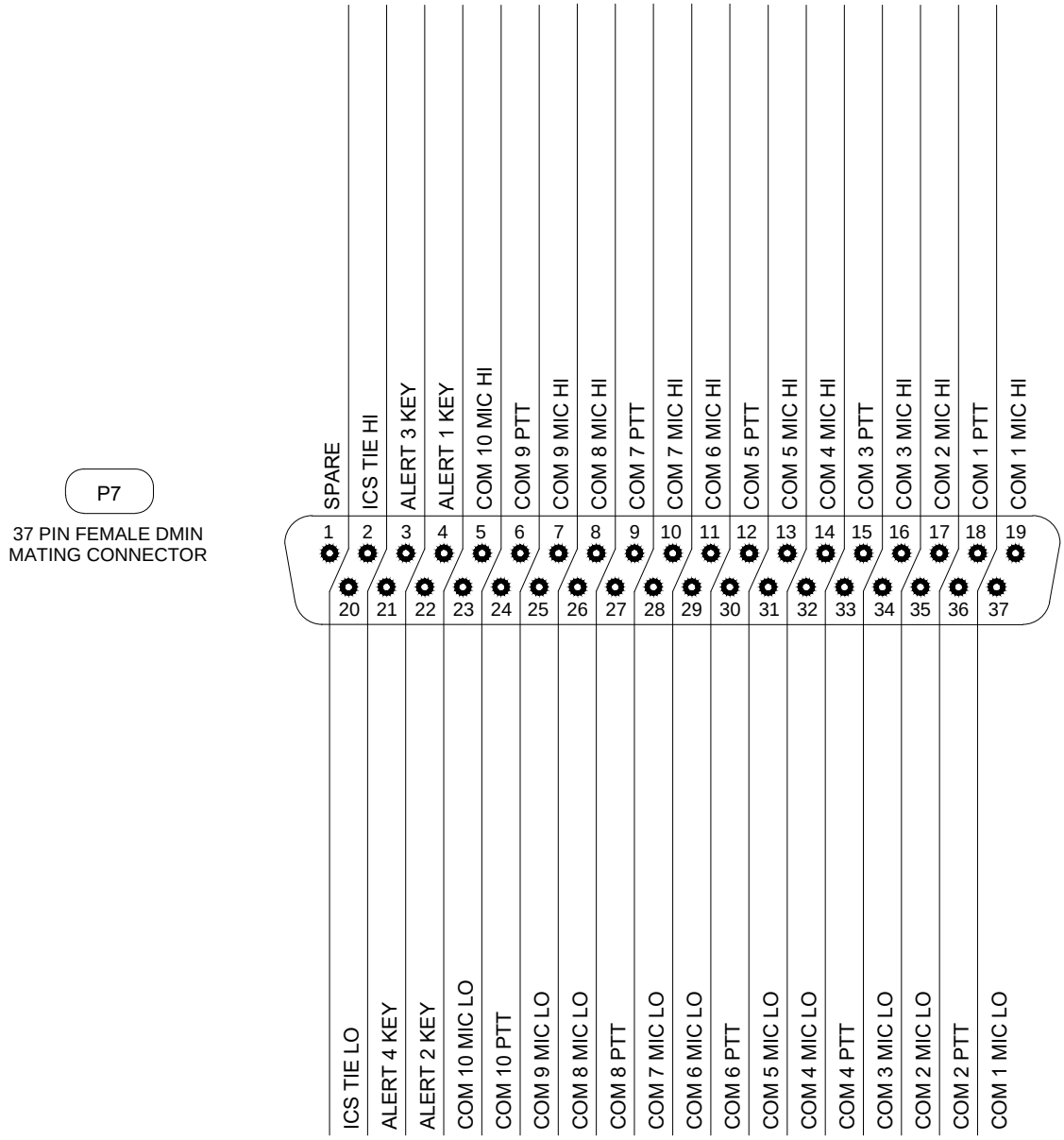

VIEW IS FROM REAR OF MATING CONNECTOR

PREPARED	KV	JUPITER AVIONICS CORPORATION
CHECKED		TITLE: Audio Junction Panel P7 Connector Map
APPROVED		NCAGE CODE: L00N3 / PART NO.: JA84-001 / SHEET: 07/22
CONFIDENTIAL & PROPRIETARY TO JUPITER AVIONICS CORP.		DOC NO.: JA84-001 Connector Map Rev A

Audio Panel 3 Transceiver Inputs

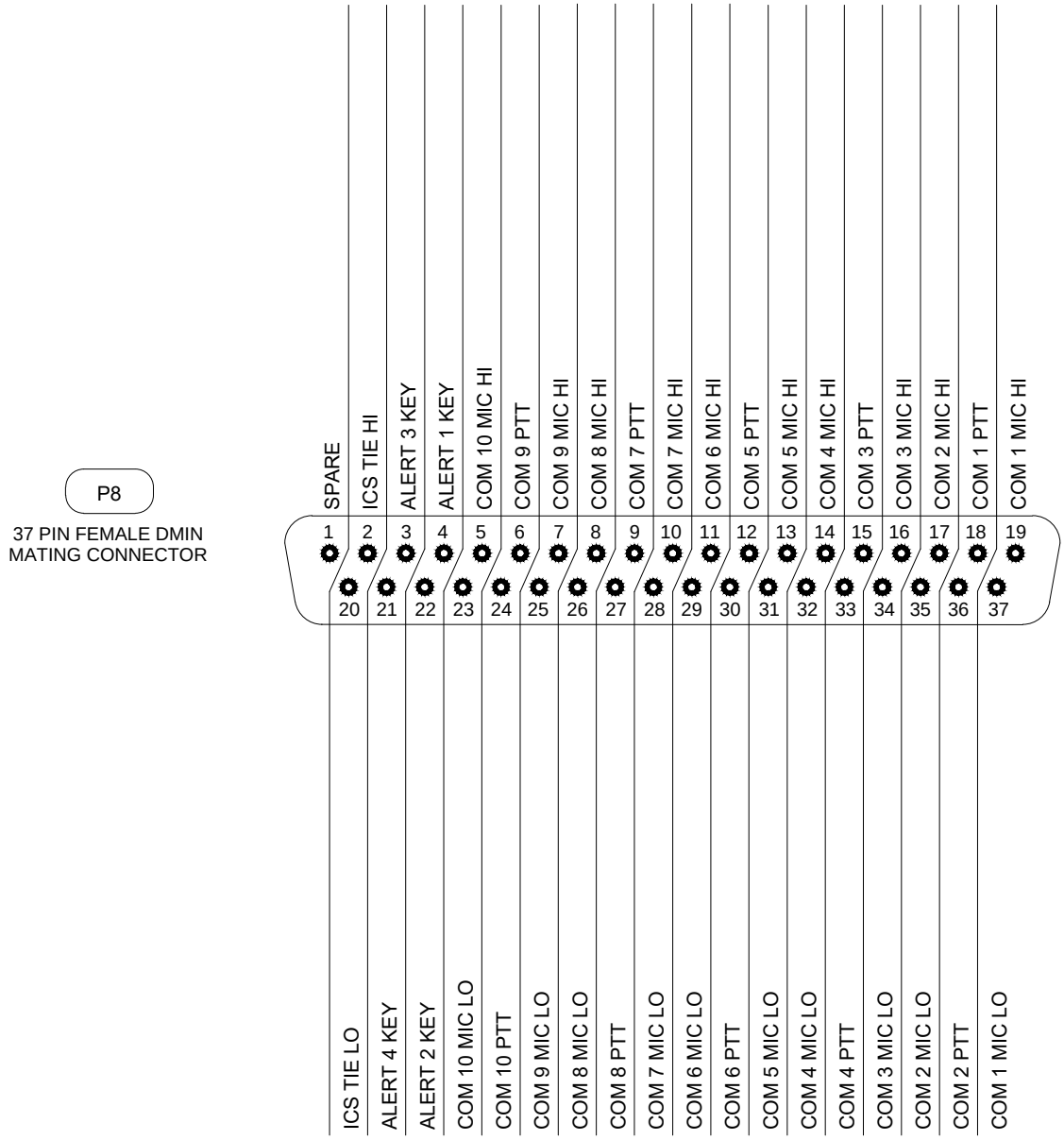

VIEW IS FROM REAR OF MATING CONNECTOR

PREPARED	KV	JUPITER AVIONICS CORPORATION
CHECKED		TITLE: Audio Junction Panel P8 Connector Map
APPROVED		NCAGE CODE: L00N3 / PART NO.: JA84-001 / SHEET: 08/22
CONFIDENTIAL & PROPRIETARY TO JUPITER AVIONICS CORP.		DOC NO.: JA84-001 Connector Map Rev A

Audio Panel 4 Transceiver Inputs

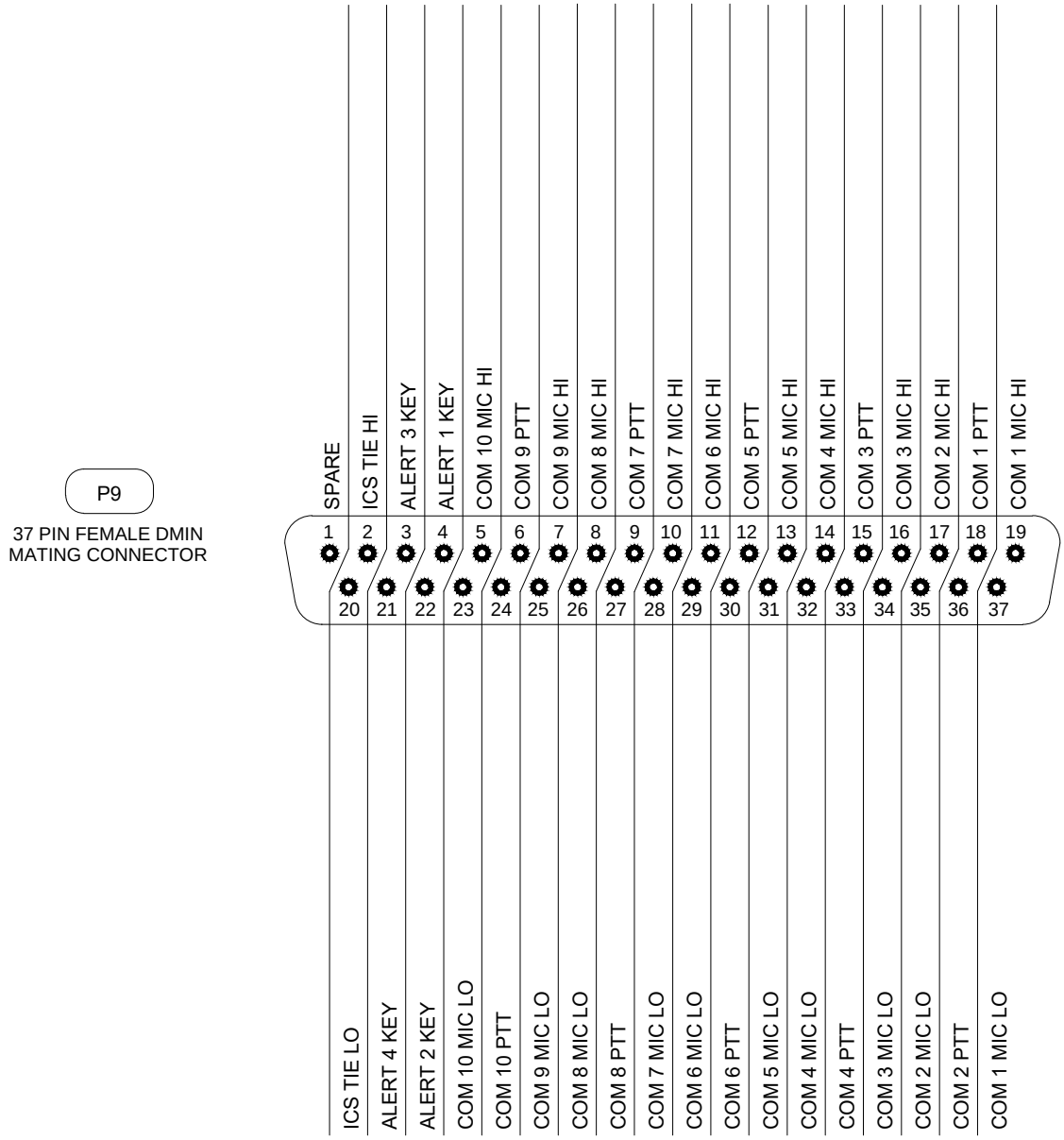

VIEW IS FROM REAR OF MATING CONNECTOR

PREPARED	KV	JUPITER AVIONICS CORPORATION
CHECKED		TITLE: Audio Junction Panel P9 Connector Map
APPROVED		NCAGE CODE: L00N3 / PART NO.: JA84-001 / SHEET: 09/22
CONFIDENTIAL & PROPRIETARY TO JUPITER AVIONICS CORP.		DOC NO.: JA84-001 Connector Map Rev A

Audio Panel 5 Transceiver Inputs

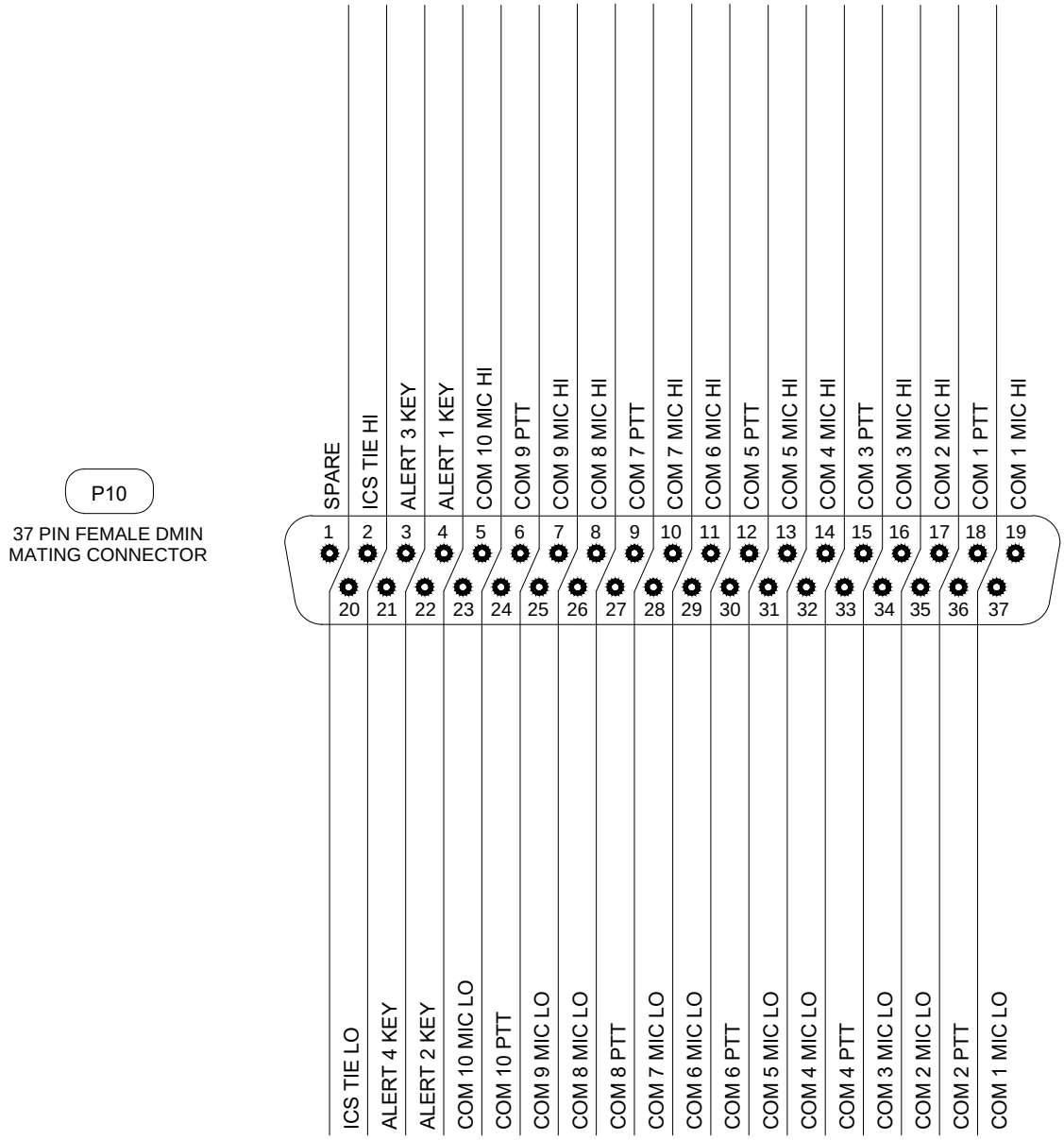

VIEW IS FROM REAR OF MATING CONNECTOR

PREPARED	KV	JUPITER AVIONICS CORPORATION
CHECKED		TITLE: Audio Junction Panel P10 Connector Map
APPROVED		NCAGE CODE: L00N3 / PART NO.: JA84-001 / SHEET: 10/22
CONFIDENTIAL & PROPRIETARY TO JUPITER AVIONICS CORP.		DOC NO.: JA84-001 Connector Map Rev A

Transceiver 1&2 Inputs & Outputs

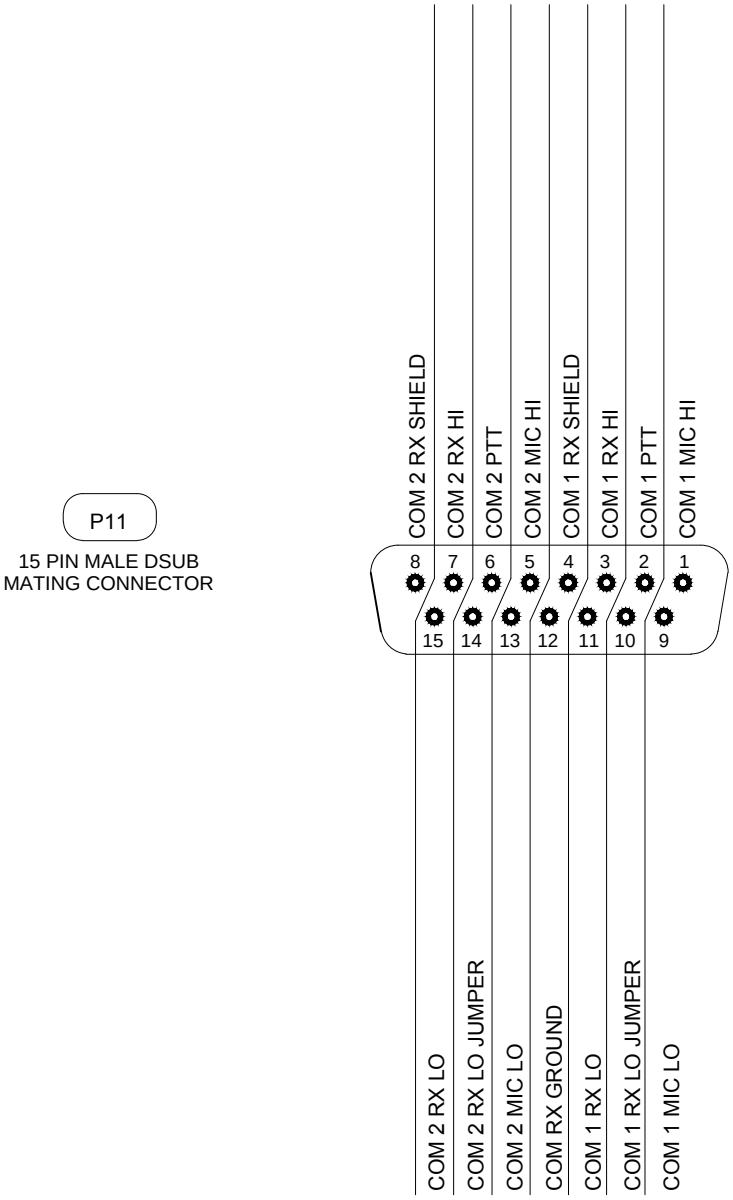

VIEW IS FROM REAR OF MATING CONNECTOR

PREPARED	KV	JUPITER AVIONICS CORPORATION		
CHECKED		TITLE Audio Junction Panel P11 Connector Map		
APPROVED		NCAGE CODE L00N3	PART NO. JA84-001	SHEET 11/22
CONFIDENTIAL & PROPRIETARY TO JUPITER AVIONICS CORP.		DOC NO. JA84-001 Connector Map Rev A		

Transceiver 3&4 Inputs & Outputs

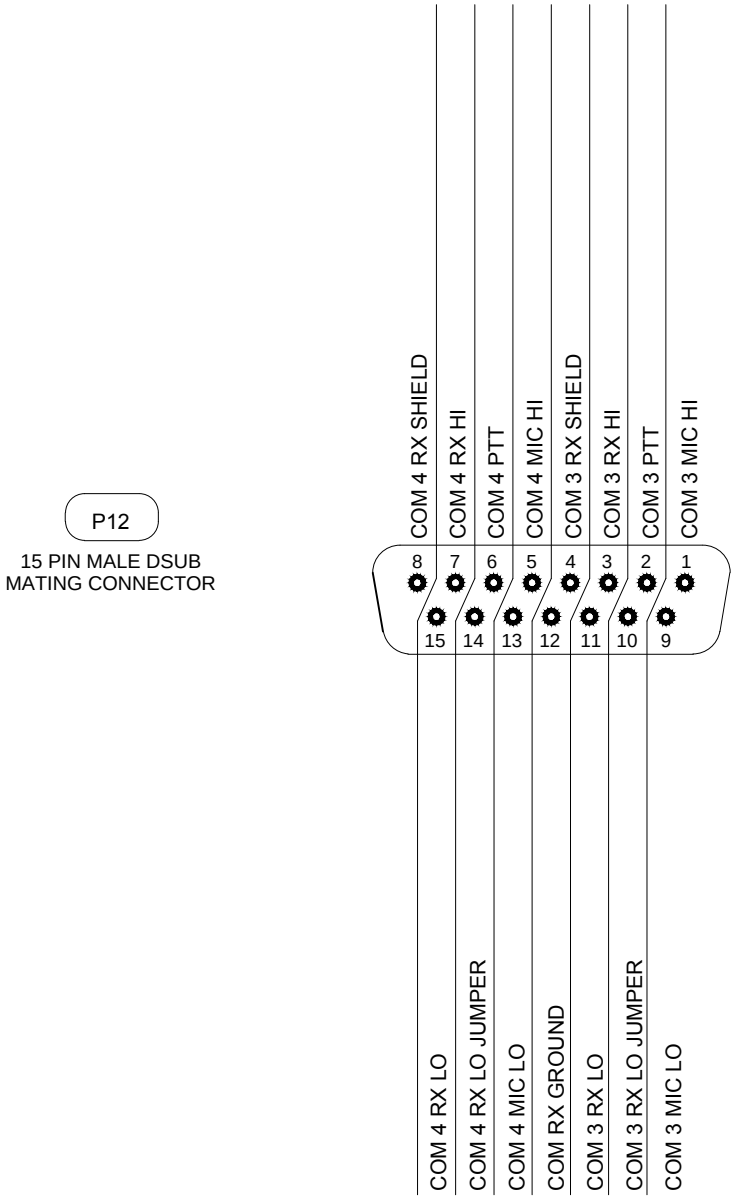

VIEW IS FROM REAR OF MATING CONNECTOR

PREPARED	KV	JUPITER AVIONICS CORPORATION		
CHECKED		TITLE Audio Junction Panel P12 Connector Map		
APPROVED		NCAGE CODE L00N3	PART NO. JA84-001	SHEET 12/22
CONFIDENTIAL & PROPRIETARY TO JUPITER AVIONICS CORP.		DOC NO. JA84-001 Connector Map Rev A		

Transceiver 5&6 Inputs & Outputs

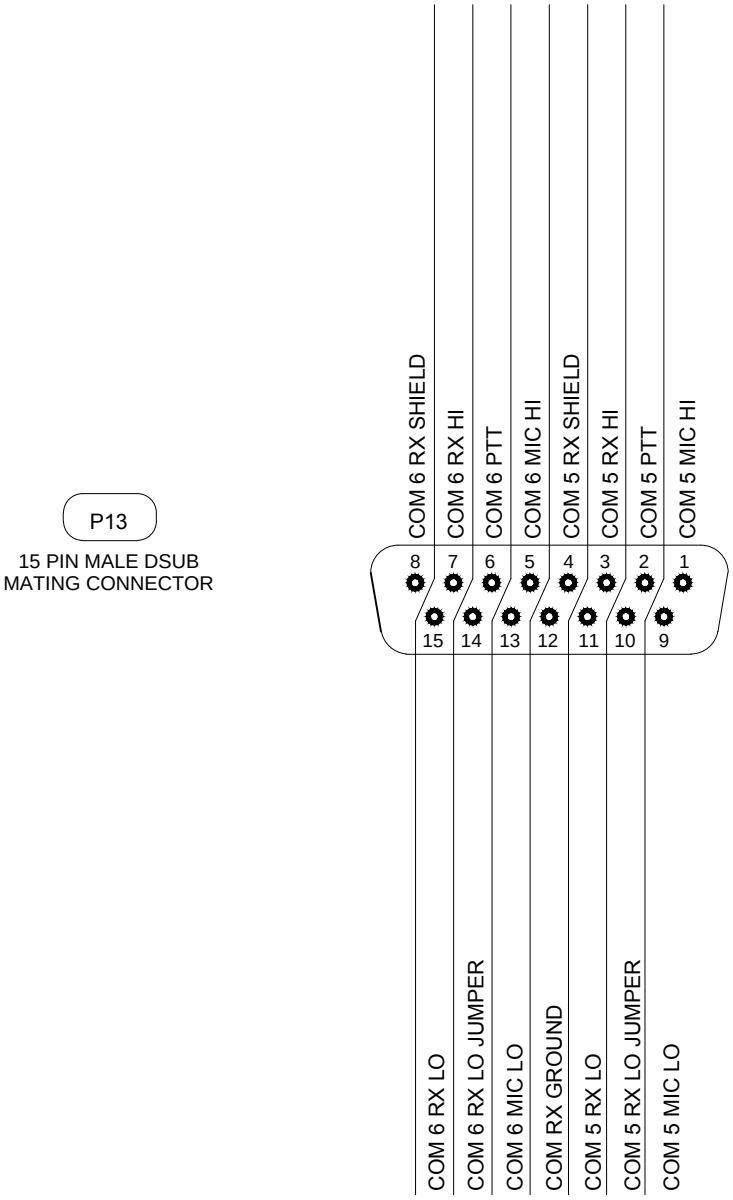

VIEW IS FROM REAR OF MATING CONNECTOR

PREPARED	KV	JUPITER AVIONICS CORPORATION		
CHECKED		TITLE Audio Junction Panel P13 Connector Map		
APPROVED		NCAGE CODE L00N3	PART NO. JA84-001	SHEET 13/22
CONFIDENTIAL & PROPRIETARY TO JUPITER AVIONICS CORP.		DOC NO. JA84-001 Connector Map Rev A		

Transceiver 7&8 Inputs & Outputs

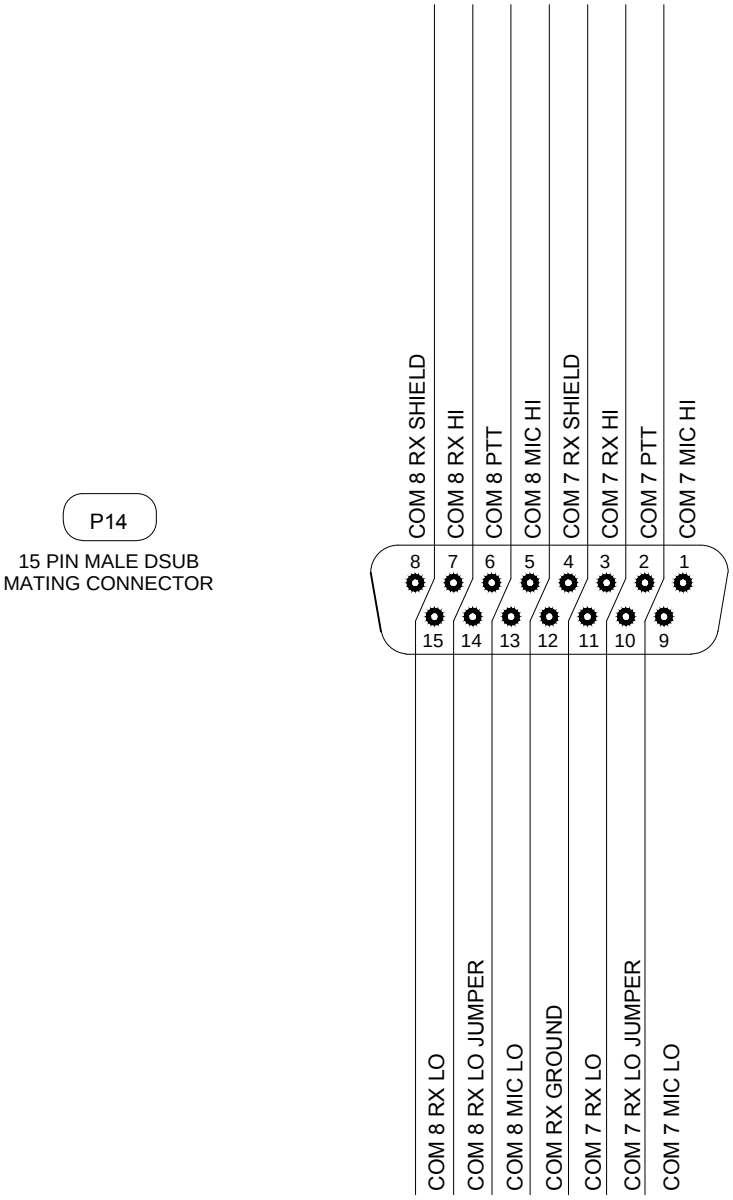

VIEW IS FROM REAR OF MATING CONNECTOR

PREPARED	KV	JUPITER AVIONICS CORPORATION		
CHECKED		TITLE Audio Junction Panel P14 Connector Map		
APPROVED		NCAGE CODE L00N3	PART NO. JA84-001	SHEET 14/22
CONFIDENTIAL & PROPRIETARY TO JUPITER AVIONICS CORP.		DOC NO. JA84-001 Connector Map Rev A		

Transceiver 9&10 Inputs & Outputs

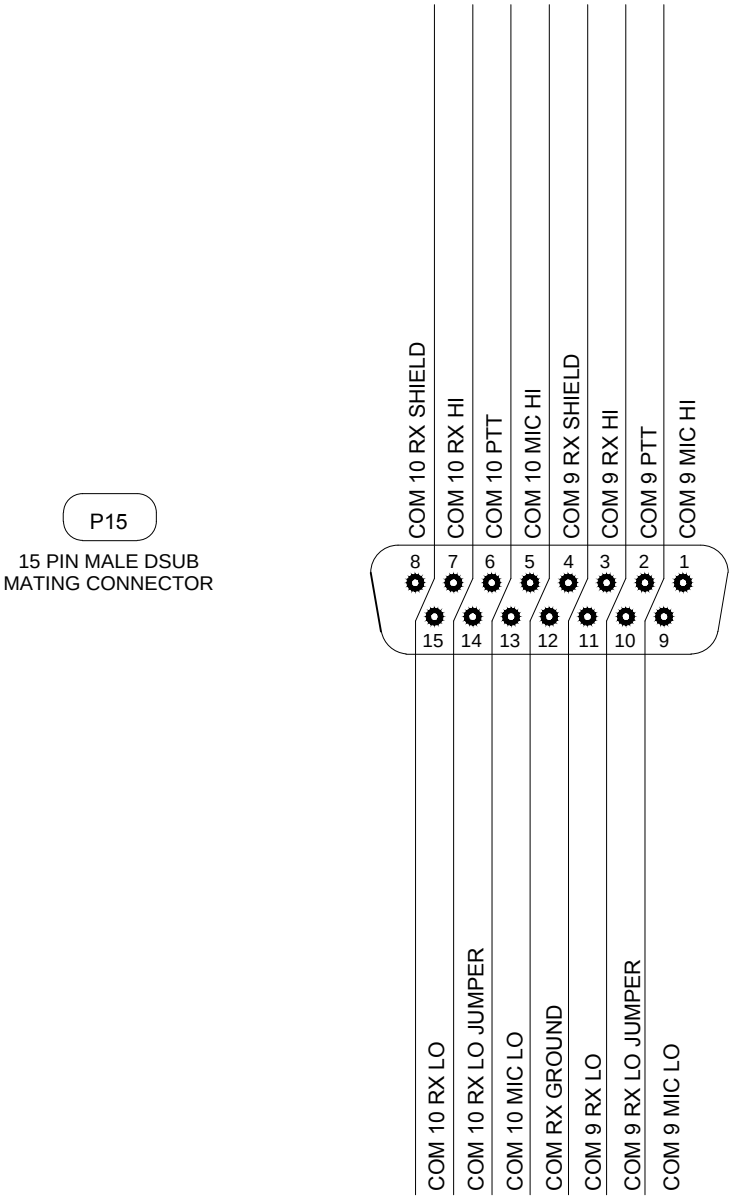

VIEW IS FROM REAR OF MATING CONNECTOR

PREPARED	KV	JUPITER AVIONICS CORPORATION		
CHECKED		TITLE Audio Junction Panel P15 Connector Map		
APPROVED		NCAGE CODE L00N3	PART NO. JA84-001	SHEET 15/22
CONFIDENTIAL & PROPRIETARY TO JUPITER AVIONICS CORP.		DOC NO. JA84-001 Connector Map Rev A		

Nav Receiver 1&2 Inputs

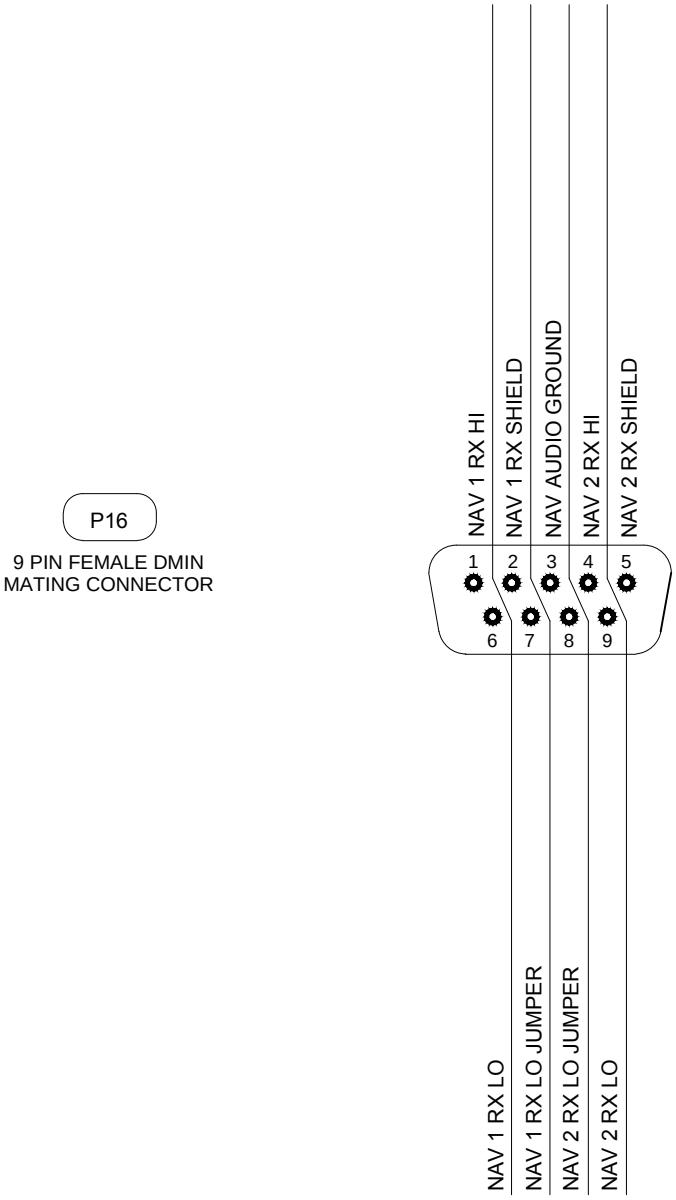

VIEW IS FROM REAR OF MATING CONNECTOR

PREPARED	KV	JUPITER AVIONICS CORPORATION		
CHECKED		TITLE Audio Junction Panel P16 Connector Map		
APPROVED		NCAGE CODE L00N3	PART NO. JA84-001	SHEET 16/22
CONFIDENTIAL & PROPRIETARY TO JUPITER AVIONICS CORP.		DOC NO. JA84-001 Connector Map Rev A		

Nav Receiver 3&4 Inputs

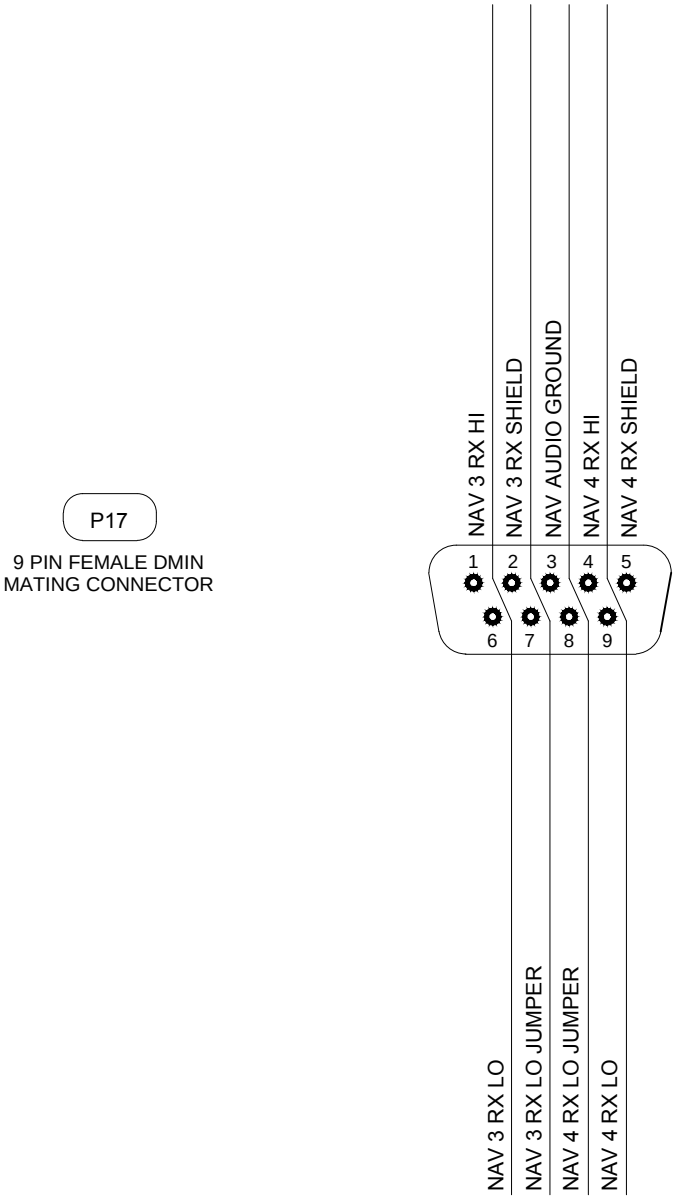

VIEW IS FROM REAR OF MATING CONNECTOR

PREPARED	KV	JUPITER AVIONICS CORPORATION		
CHECKED		TITLE Audio Junction Panel P17 Connector Map		
APPROVED		NCAGE CODE L00N3	PART NO. JA84-001	SHEET 17/22
CONFIDENTIAL & PROPRIETARY TO JUPITER AVIONICS CORP.		DOC NO. JA84-001 Connector Map Rev A		

Nav Receiver 5&6 Inputs

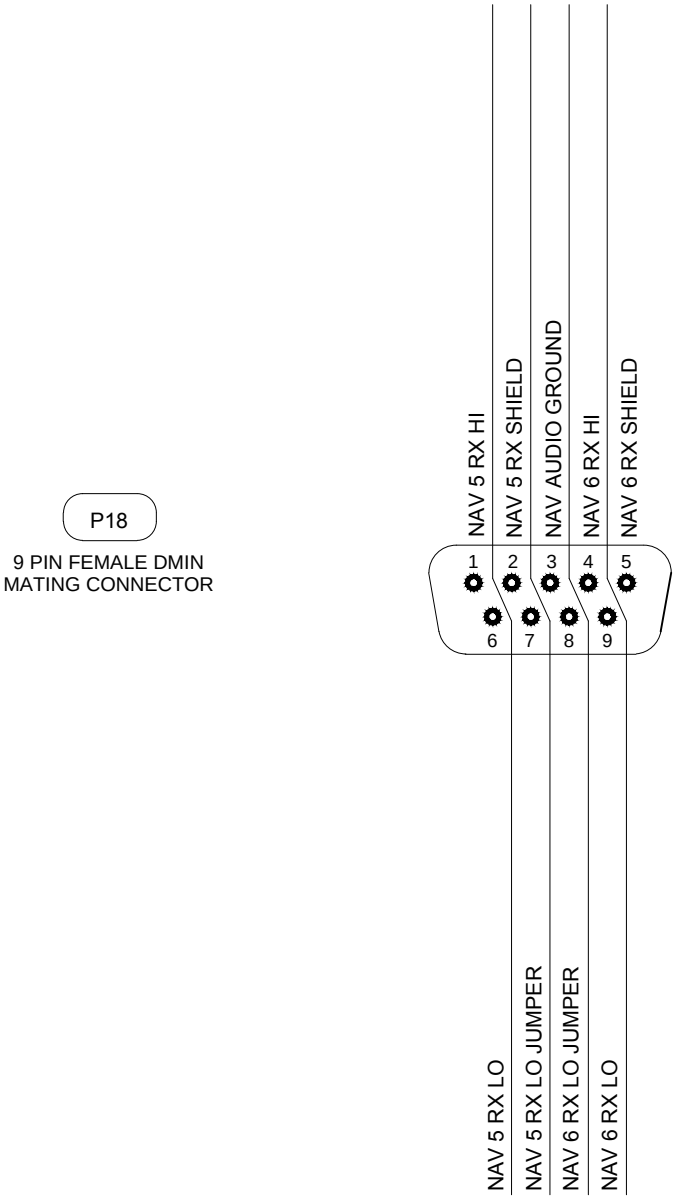

VIEW IS FROM REAR OF MATING CONNECTOR

PREPARED	KV	JUPITER AVIONICS CORPORATION		
CHECKED		TITLE Audio Junction Panel P18 Connector Map		
APPROVED		NCAGE CODE L00N3	PART NO. JA84-001	SHEET 18/22
CONFIDENTIAL & PROPRIETARY TO JUPITER AVIONICS CORP.		DOC NO. JA84-001 Connector Map Rev A		

Direct Audio 1&2 Inputs

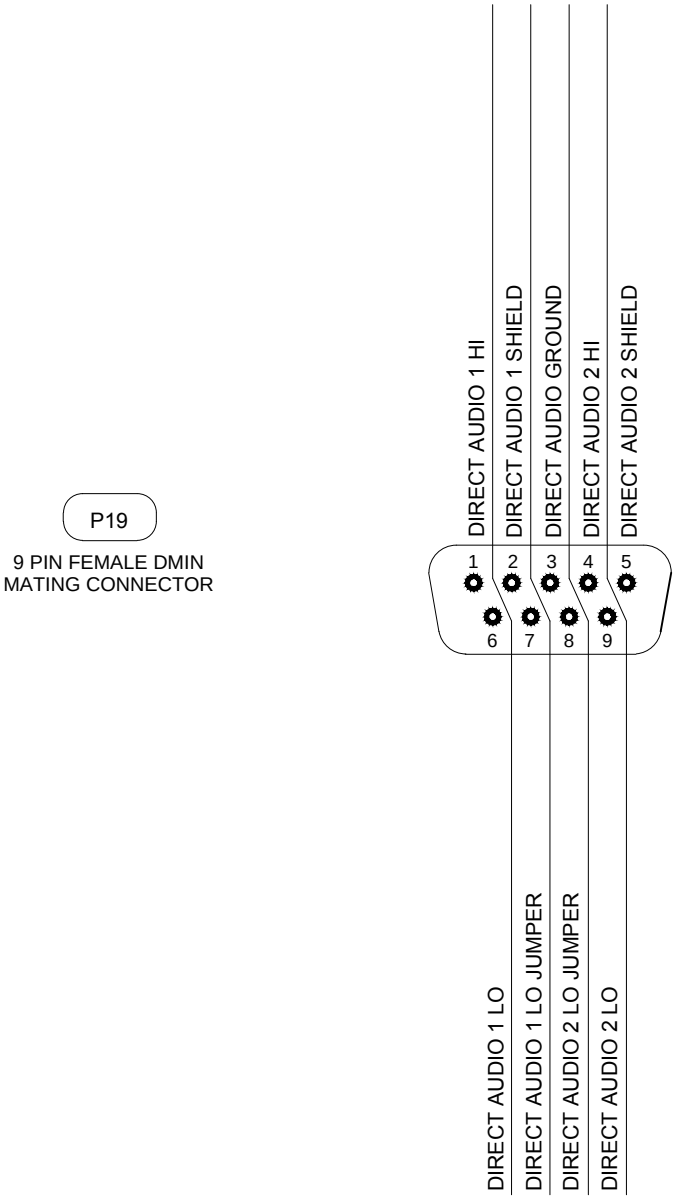

VIEW IS FROM REAR OF MATING CONNECTOR

PREPARED	KV	JUPITER AVIONICS CORPORATION		
CHECKED		TITLE Audio Junction Panel P19 Connector Map		
APPROVED		NCAGE CODE L00N3	PART NO. JA84-001	SHEET 19/22
CONFIDENTIAL & PROPRIETARY TO JUPITER AVIONICS CORP.		DOC NO. JA84-001 Connector Map Rev A		

Direct Audio 3&4 Inputs

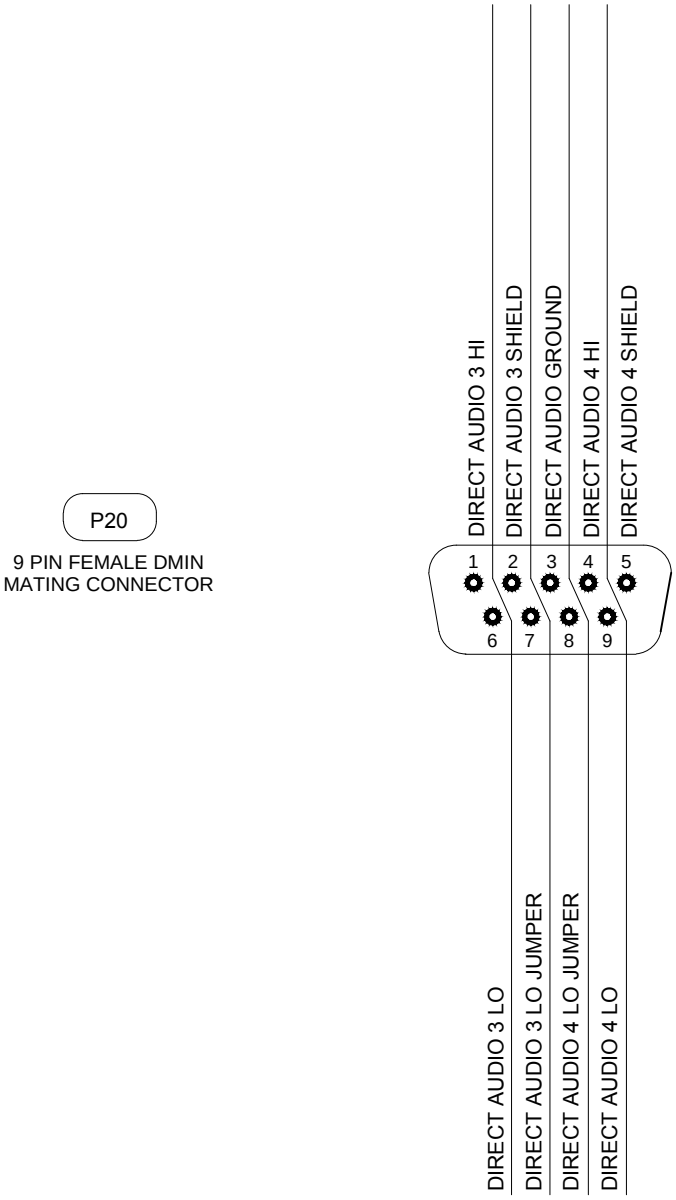

VIEW IS FROM REAR OF MATING CONNECTOR

PREPARED	KV	JUPITER AVIONICS CORPORATION		
CHECKED		TITLE Audio Junction Panel P20 Connector Map		
APPROVED		NCAGE CODE L00N3	PART NO. JA84-001	SHEET 20/22
CONFIDENTIAL & PROPRIETARY TO JUPITER AVIONICS CORP.		DOC NO. JA84-001 Connector Map Rev A		

Music Inputs

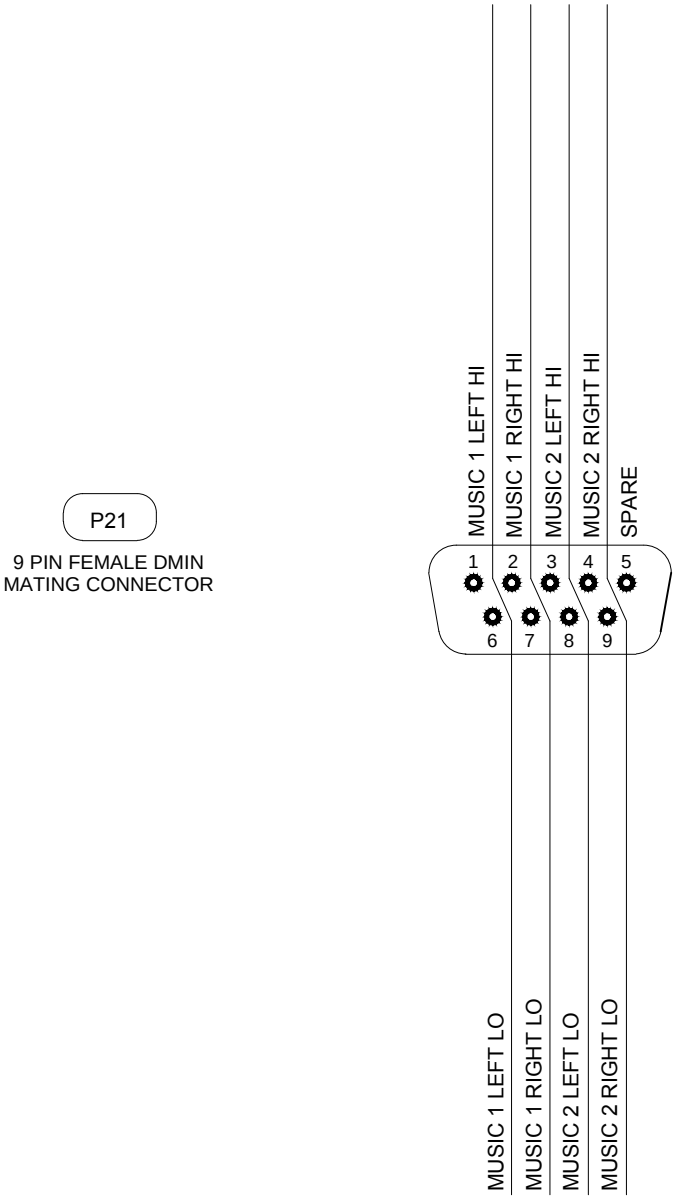

VIEW IS FROM REAR OF MATING CONNECTOR

PREPARED	KV	JUPITER AVIONICS CORPORATION		
CHECKED		TITLE Audio Junction Panel P21 Connector Map		
APPROVED		NCAGE CODE L00N3	PART NO. JA84-001	SHEET 21/22
CONFIDENTIAL & PROPRIETARY TO JUPITER AVIONICS CORP.		DOC NO. JA84-001 Connector Map Rev A		

Alert Inputs

P22

9 PIN FEMALE DMIN
MATING CONNECTOR

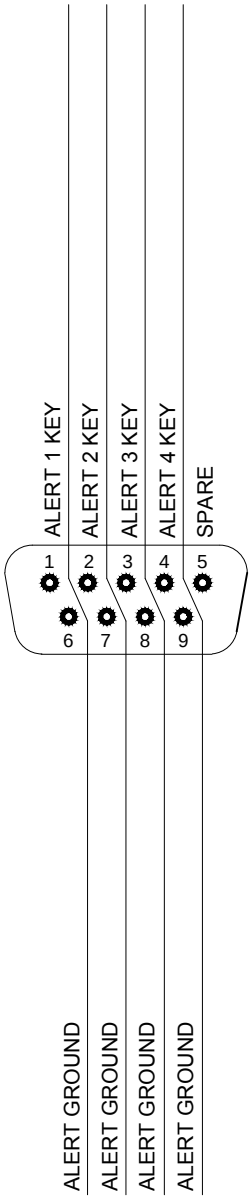

VIEW IS FROM REAR OF MATING CONNECTOR

PREPARED	KV	JUPITER AVIONICS CORPORATION		
CHECKED		TITLE Audio Junction Panel P22 Connector Map		
APPROVED		NCAGE CODE L00N3	PART NO. JA84-001	SHEET 22/22
CONFIDENTIAL & PROPRIETARY TO JUPITER AVIONICS CORP.		DOC NO. JA84-001 Connector Map Rev A		

JA84-001 INTERCONNECT WIRING NOTES

NOTES

1. ALL WIRE SIZE SHOULD BE 24 AWG MIN UNLESS OTHERWISE SPECIFIED. UNSHIELDED WIRE SHOULD BE SELECTED PER FAA AC43.13-1B CHANGE 1 PARA 11-76 TO 11-78. WIRE TYPES SHOULD BE IN ACCORDANCE WITH MIL-W-22759 AS DESCRIBED IN FAA AC43.13-1B CHANGE 1 PARA 11-85 AND 11-86 AND LISTED IN TABLE 11-11 OR 11-12. ALL SHIELDED CABLE SHOULD BE IN ACCORDANCE WITH MIL-DTL-27500 (REVISION H OR LATER).

2. CONNECTION TO AIRFRAME GROUND SHOULD BE MADE WITH 20 AWG WIRE. LENGTH NOT TO EXCEED 3 FT (0.9 M).

3. CABLE SHIELDS AT THE JA84-001 CONNECTOR PINS SHOULD BE TERMINATED TO AIRFRAME GROUND USING A TAG RING P/N: MS27741-5 OR EQUIVALENT.

4. OPTIONAL GROUND. MAY BE USED TO IMPROVE SYSTEM NOISE.

PREPARED	TAT	JUPITER AVIONICS CORPORATION		
CHECKED	JAC 02-26-21 AH	TITLE Audio Junction Panel Interconnect Notes		
APPROVED	JAC 02-26-21 KDV	NCAGE CODE L00N3	PART NO. JA84-001	SHEET 1/5
CONFIDENTIAL & PROPRIETARY TO JUPITER AVIONICS CORP.		DOC NO. JA84-001 Interconnect Rev A.dwg		

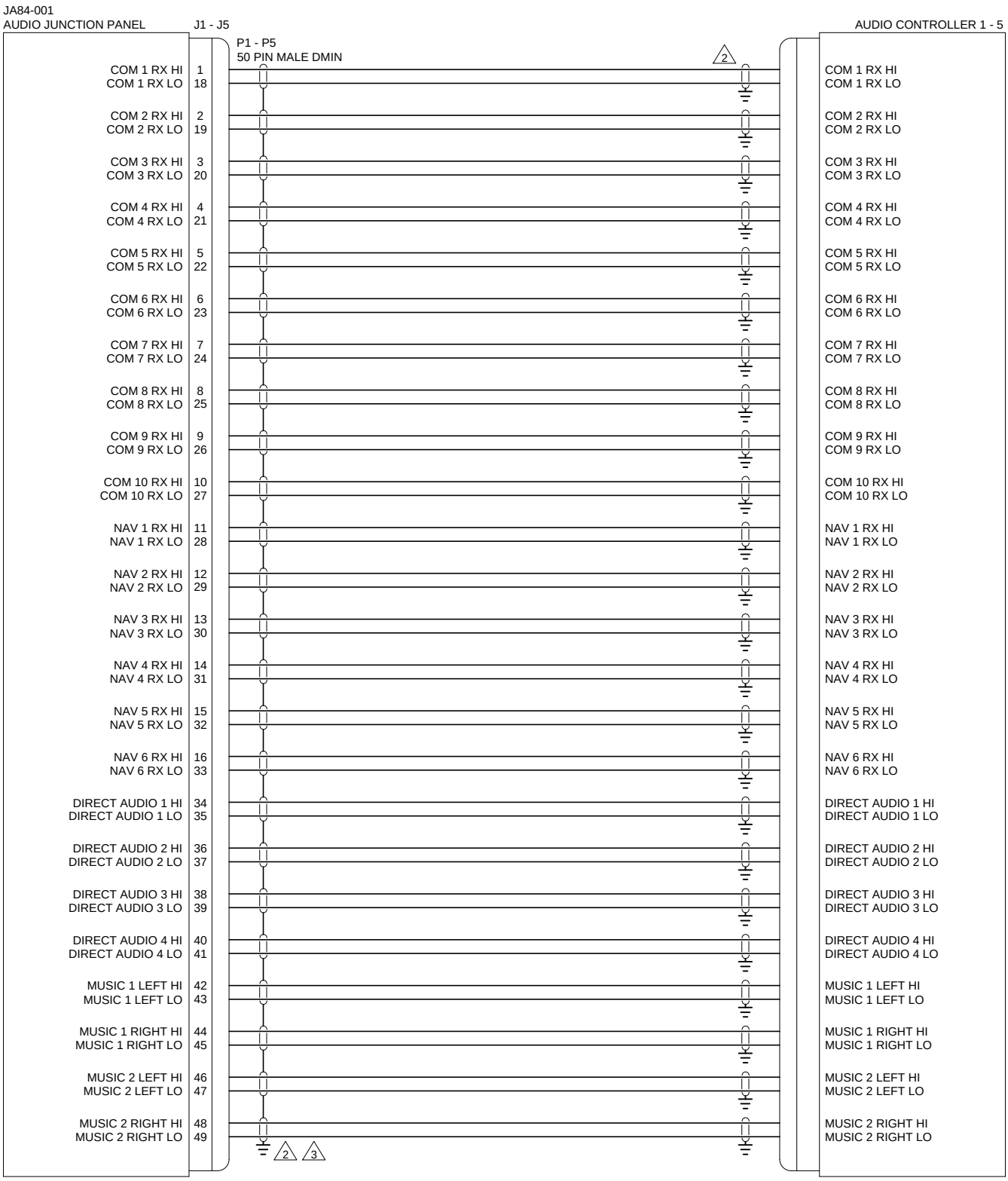

PREPARED	TAT	JUPITER AVIONICS CORPORATION		
CHECKED	JAC 02-26-21 AH	TITLE Audio Junction Panel J1 - J5 Interconnect		
APPROVED	JAC 02-26-21 KDV	NCAGE CODE L00N3	PART NO. JA84-001	SHEET 2/5
CONFIDENTIAL & PROPRIETARY TO JUPITER AVIONICS CORP.		DOC NO. JA84-001 Interconnect Rev A.dwg		

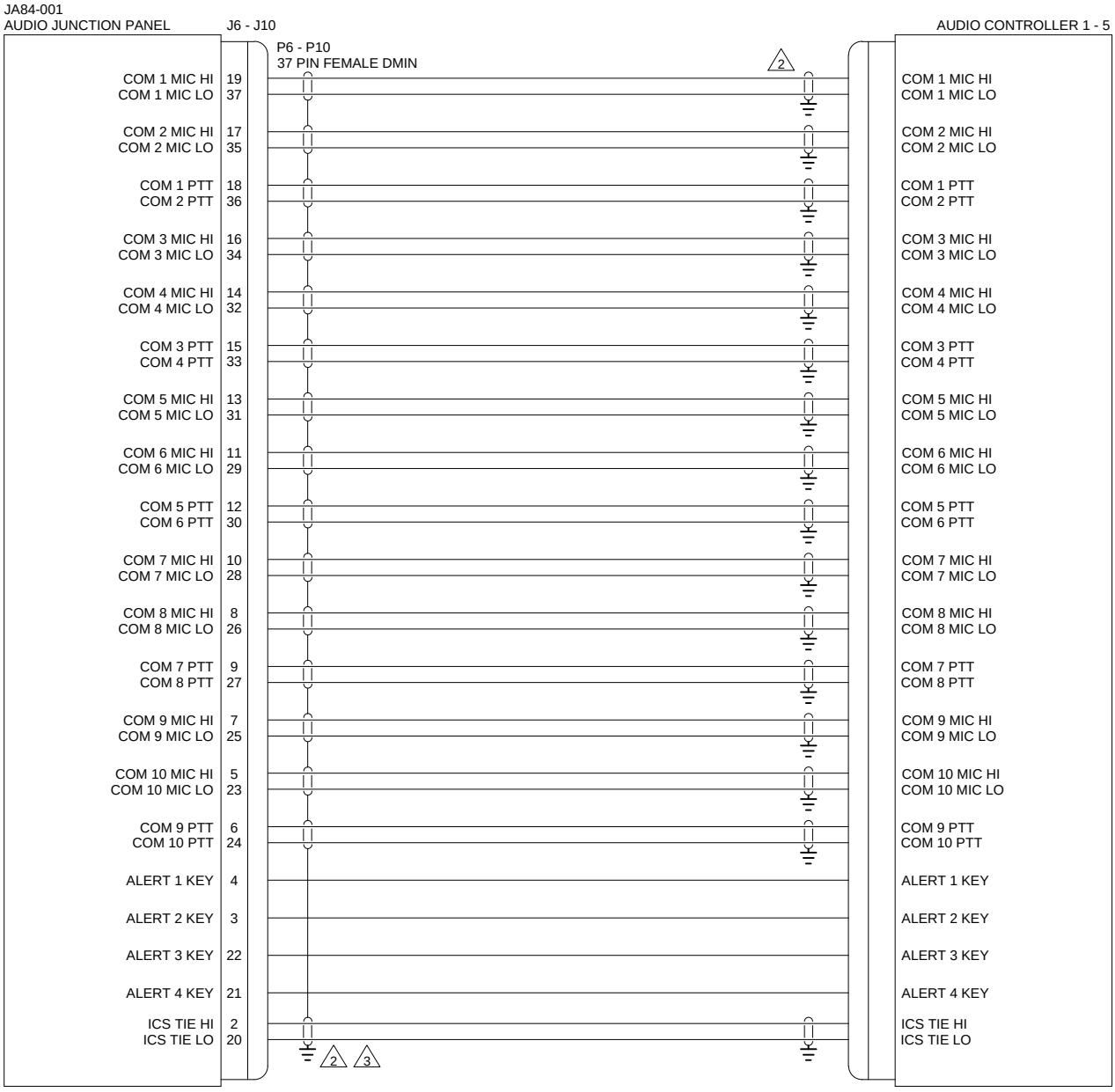

PREPARED	TAT	JUPITER AVIONICS CORPORATION		
CHECKED	JAC 02-26-21 AH	TITLE Audio Junction Panel J6 - J10 Interconnect		
APPROVED	JAC 02-26-21 KDV	NCAGE CODE L00N3	PART NO. JA84-001	SHEET 3/5
CONFIDENTIAL & PROPRIETARY TO JUPITER AVIONICS CORP.		DOC NO. JA84-001 Interconnect Rev A.dwg		

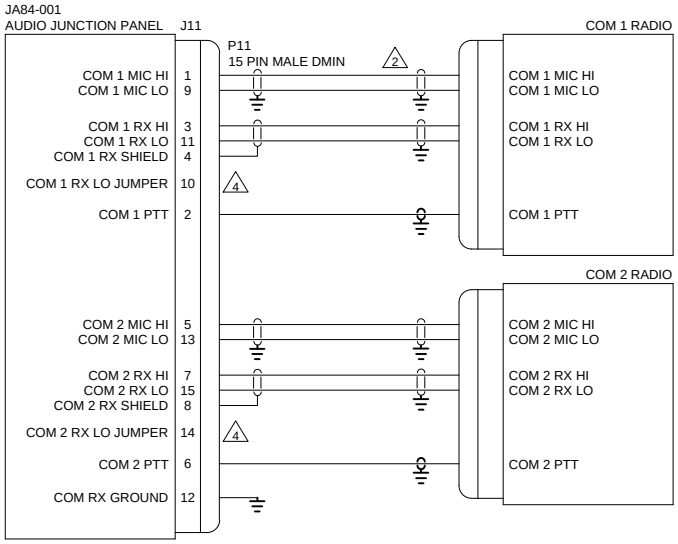

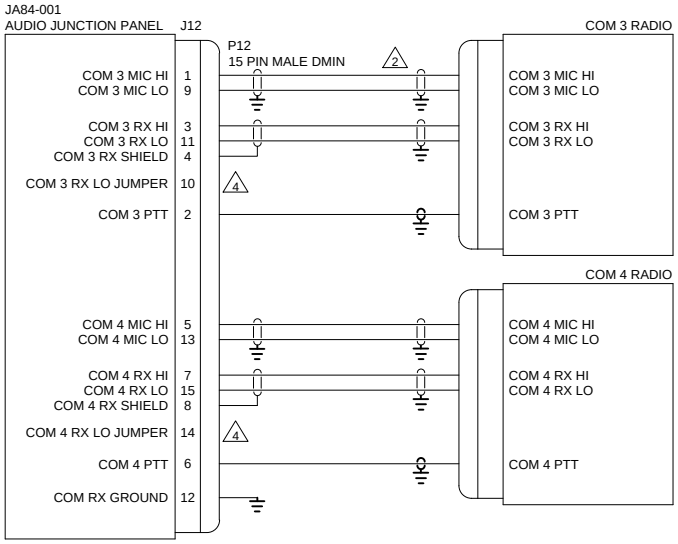

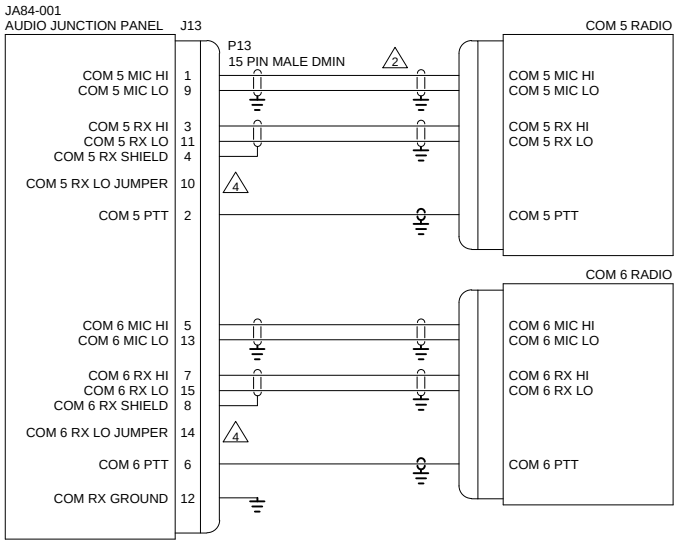

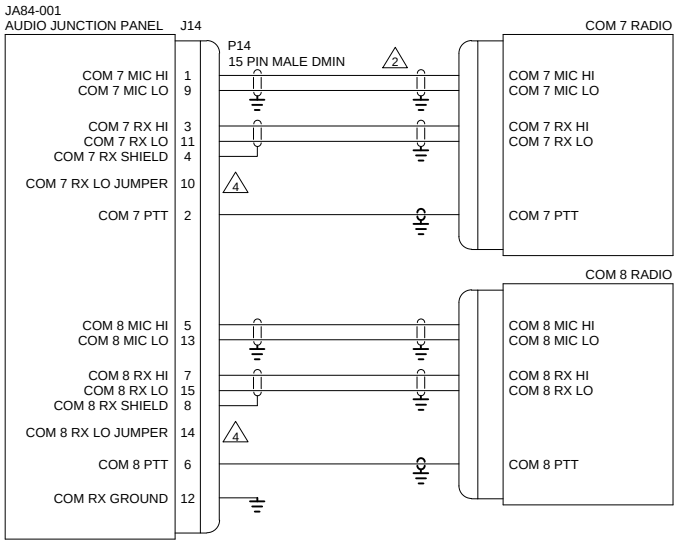

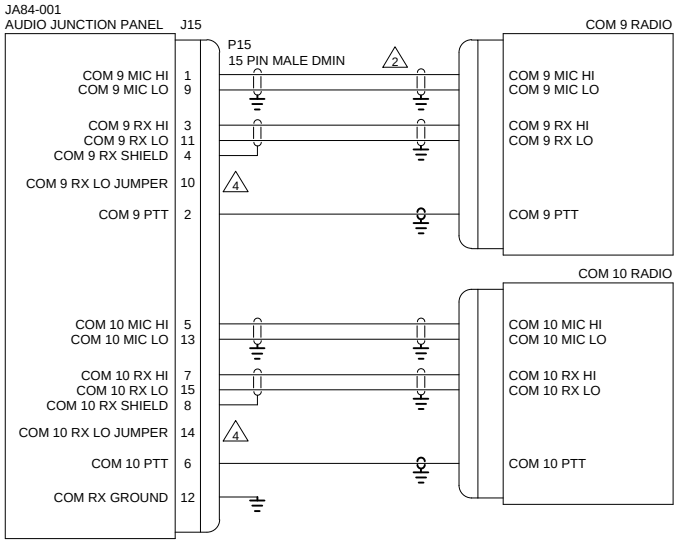

PREPARED	TAT	JUPITER AVIONICS CORPORATION
CHECKED	JAC 02-26-21 AH	TITLE: Audio Junction Panel J11 - J15 Interconnect
APPROVED	JAC 02-26-21 KDV	NCAGE CODE: L00N3 / PART NO.: JA84-001 / SHEET: 4/5
CONFIDENTIAL & PROPRIETARY TO JUPITER AVIONICS CORP.		DOC NO.: JA84-001 Interconnect Rev A.dwg

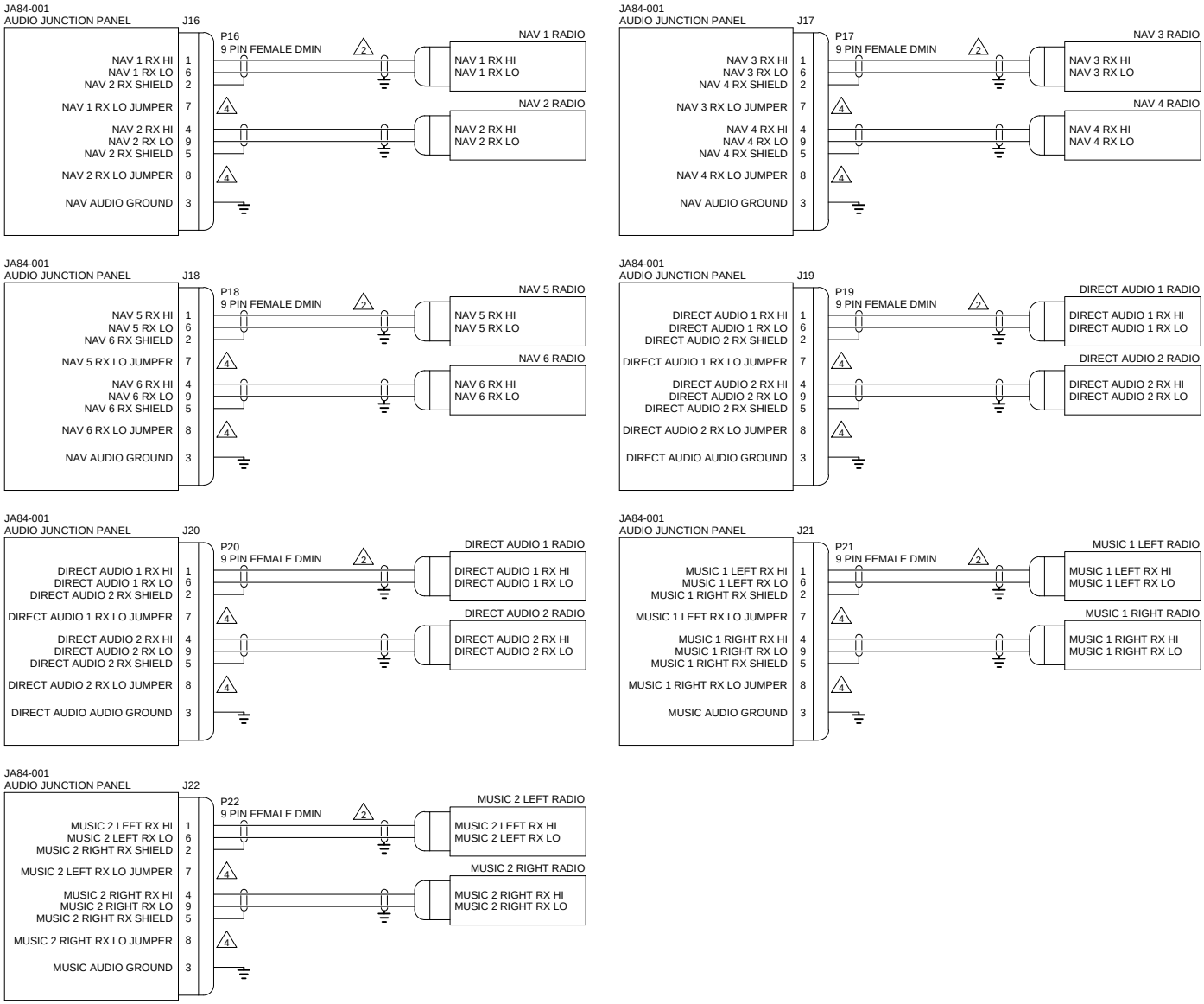

PREPARED	TAT	JUPITER AVIONICS CORPORATION		
CHECKED	JAC 02-26-21 AH	TITLE Audio Junction Panel J16 - J22 Interconnect		
APPROVED	JAC 02-26-21 KDV	NCAGE CODE L00N3	PART NO. JA84-001	SHEET 5/5
CONFIDENTIAL & PROPRIETARY TO JUPITER AVIONICS CORP.		DOC NO. JA84-001 Interconnect Rev A.dwg		

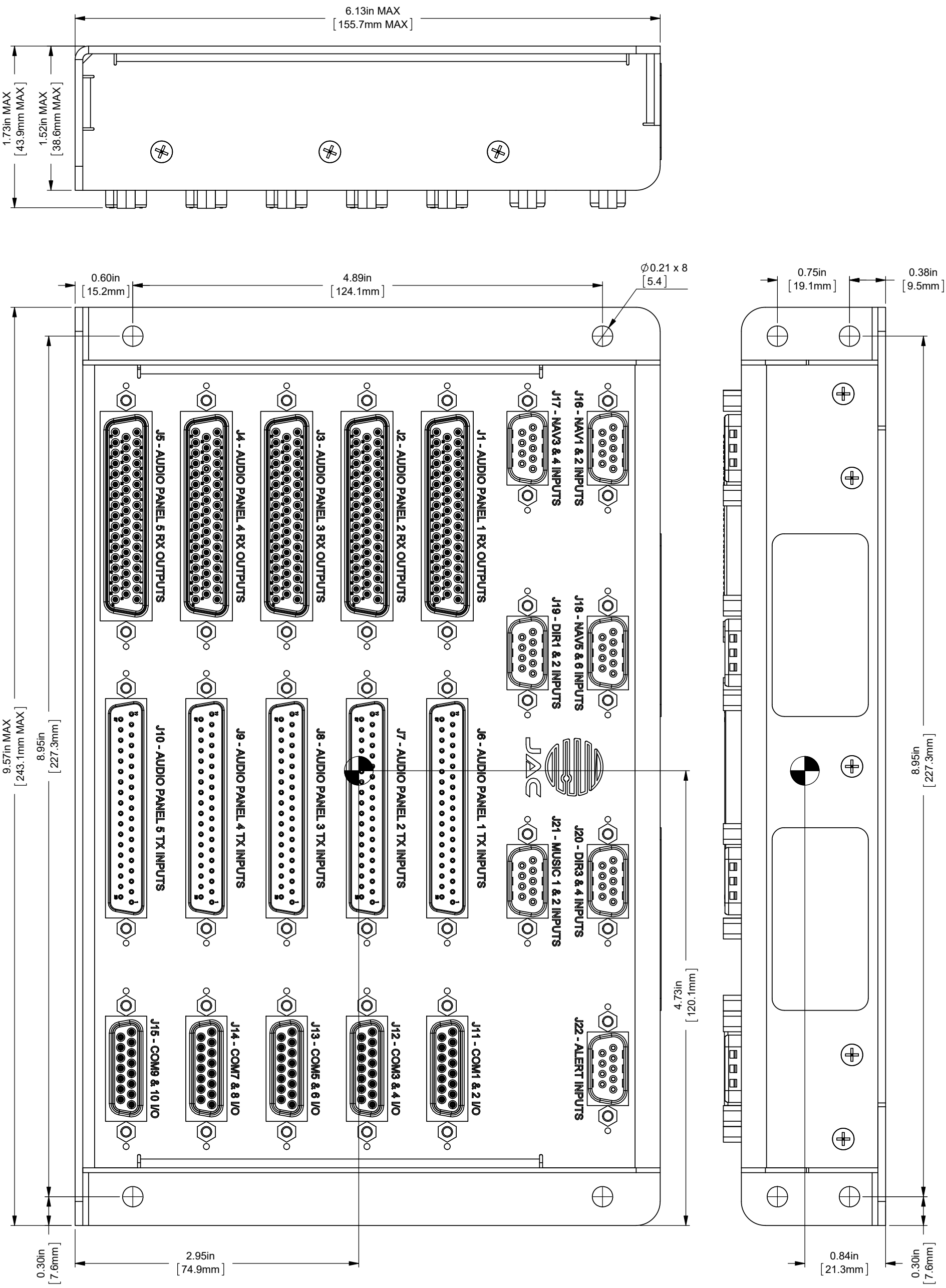

CENTER OF GRAVITY
±0.03in [0.8mm]

WEIGHT: 2.12 lbs [0.96 kg] MAX.

UNLESS OTHERWISE SPECIFIED DIMENSIONS ARE IN INCHES ANGLES ARE IN DEGREES TOLERANCES: 1 DEC PLACE: ± 0.1 2 DEC PLACE: ± 0.01 3 DEC PLACE: ± 0.005 ANGLES: ± 0.5 DEG	PREPARED	TAT
	CHECKED	JAC 02-25-21 AH
	APPROVED	JAC 02-25-21 KDV
MATERIAL: N/A	CONFIDENTIAL & PROPRIETARY TO JUPITER AVIONICS CORP.	
FINISH: N/A	DRAWING NOT TO SCALE	

JUPITER AVIONICS CORPORATION

TITLE: Audio Junction Panel

NCAGE CODE	PART NO.	SHEET
L00N3	JA84-001	1/1

DOC. NO. JA84-001 Mechanical Installation Rev A.SLDDRW

Installation Manual

Appendix B - Certification Documents

B1 Airworthiness Approval

Airworthiness approval of the JA84-001 may require completion of a TCCA Major Modification Report per CAR STD (AWM) 571 Appendix L, or a FAA Form 337. The sample wording for a description of the work is provided to assist the Installing Agency in preparing Instructions for Continued Airworthiness (ICA) when replacing an existing junction panel with a Jupiter Avionics JA84-001 Audio Junction Panel. This sample may be modified appropriately for new installations. It is the installer's responsibility to determine the applicability of the method used. Installations performed outside Canada must follow the applicable aviation authority's regulations.

Sample Wording:

Removed the existing [model] junction panel and replaced with a Jupiter Avionics JA84-001 Audio Junction Panel in [aircraft location].

The JA84-001 meets RTCA DO-160G environmental qualifications for this installation. See Section 1 of the JA84-001 Installation Manual.

Installed in accordance with the JA84-001 Installation Manual, Revision [ ], and AC 43.13-2, Chapters 2 and 3.

The JA84-001 interfaces with existing aircraft systems per the Installation Manual instructions.

The JA84-001 Installation Manual provides detailed installation instructions and wiring diagrams (Section 2, and Appendices A and B).

Aircraft equipment list, weights and balance amended. Compass compensation checked and found to conform to applicable regulations.

B2 Instructions for Continued Airworthiness

Maintenance of the JA84-001 Audio Junction Panel is "on condition" only. Refer to the JA84-001 Maintenance Manual. Periodic maintenance of the JA84-001 is not required.

The following sample Instructions for Continued Airworthiness (ICA) provides assistance in preparing ICA for the Jupiter Avionics JA84-001 unit installation as part of a Type Certificate (TC) or Supplemental Type Certificate (STC) project to comply with CAR STD (AWM) 523/527/525/529.1529 or FAR 23/25/27/29.1529 "Instructions for Continued Airworthiness".

Items that may vary by aircraft make and model are shown in brackets ("[ ]") and should be filled in as appropriate. Some of the checklist items do not apply, in which case they should be marked "N/A" (Not Applicable).

Instructions for Continued Airworthiness, Jupiter Avionics JA84-001 Audio Junction Panel in an [Aircraft Make and Model]

1. Introduction

[Aircraft that has been altered: Registration number, Make, Model and Serial Number]

Content, Scope, Purpose and Arrangement: This document identifies the Instructions for Continued Airworthiness for a Jupiter Avionics JA84-001 installed in an [aircraft make and model].

Applicability: Applies to a Jupiter Avionics JA84-001 installed in an [aircraft make and model].

Definitions/Abbreviations: None, N/A.

Precautions: None, N/A.

Units of Measurement: None, N/A.

Referenced Publications: JA84-001 Installation Manual
JA84-001 Maintenance Manual
STC/TC # [applicable STC/TC number for the specific aircraft installation]

Distribution: This document should be a permanent aircraft record.

2. Description of the System/Alteration

Jupiter Avionics JA84-001 Audio Junction Panel with interface to external transceivers and [include other equipment/systems as appropriate]. Refer to Appendix A of this manual for interconnect information. Refer to aircraft manufacturer approved interconnect for actual installation.

3. Control, Operation Information

N/A

4. Servicing Information

N/A

5. Maintenance Instructions

Maintenance of the JA84-001 is ‘on condition’ only. Periodic maintenance is not required. Refer to the JA84-001Maintenance Manual.

6. Troubleshooting Information

Refer to the JA84-001 Maintenance Manual.

7. Removal and Replacement Information

Refer to Section 2 of this manual - the JA84-001 Installation Manual. If the unit is removed and reinstalled, a functional check of the equipment should be conducted.

8. Diagrams

Refer to Appendix A of this manual - the JA84-001 Installation Manual - for installation drawings and interconnect examples.

9. Special Inspection Requirements

N/A

10. Application of Protective Treatments

N/A

11. Data: Relative to Structural Fasteners

JA84-001 and appropriate mounting hardware installation, removal and replacement should be in accordance with applicable provisions of AC 43.13-1B and AC 43.13-2A.

12. Special Tools

N/A

13. This Section is for Commuter Category Aircraft Only

A. **Electrical loads**: Refer to Section 1 of the JA84-001 Installation Manual.
B. **Methods of balancing flight controls**: N/A.
C. **Identification of primary and secondary structures**: N/A.
D. **Special repair methods applicable to the airplane**: N/A.

14. Overhaul Period

No additional overhaul time limitations.

15. Airworthiness Limitation Section

N/A